SCHEMATIC DIAGRAMS

JOHANNUS 300-SERIES

(UNILLUMINATED DRAWSTOPS)

ALTERATIONS RESERVED

CONTENTS

1. BLOCKDIAGRAM ORGAN
2. TRANSFORMER CONNECTIONS (PRIMARY VOLTAGES) and MAIN SWITCH CONNECTIONS
3. TRANSFORMER CONNECTIONS (SECUNDARY VOLTAGES)
4. POWER SUPPLY CARDS DRAWSTOP COILS; PROCESSORS and DRAWSTOP INTERFACES
5. SCANNING MANUALS; PEDAL and TRANSPOSER
6. SCANNING (UNILLUMINATED) DRAWSTOPS
7. DRAWSTOP INTERFACE (TIME DELAYS)
8. DRAWSTOP INTERFACE (DRIVER CIRCUIT DRAWSTOP COILS)
9. SLAVE PROCESSOR
10. SCANNING CAPTURE SYSTEM
11. INPUT KEYING and TRANSPOSER (master proc.)
12. INPUT STOPS 1-72 (master proc.)
13. INPUT STOPS 73-120 and CAPTURE SYSTEM (master proc.)
14. GENERAL CRESCENDO CIRCUIT (master proc.)
15. MASTER PROCESSOR (master proc.)
16. BLOCK DIAGRAM (1 RACK)
17. POSITION DIAGRAM CARDS (TOPVIEW)
18. PINNING BUSCARD CONNECTORS (RACK)
19. POWER SUPPLY (power supply card rack)
20. PROCESSOR (processor card rack)
21. TUNING GENRATORS; CHORUS and TREMULANT (generator card rack)
22. VOICE 1 OF 4 (vioce card rack)
23. EXPRESSION PEDAL CIRCUIT (ota card rack)
24. EXTERNAL CONTROLS and INTERFACE ECHO UNIT (ota card rack)
25. PRE-AMPLIFIERS and TONE CONTROLS (amplifier card rack)
26. POWER AMPLIFIER (amplifier card A & B rack)
27. POWER AMPLIFIER (amplifier card C rack)
28. EXTERNAL CONNECTIONS (mounted on the rearside of the organ)

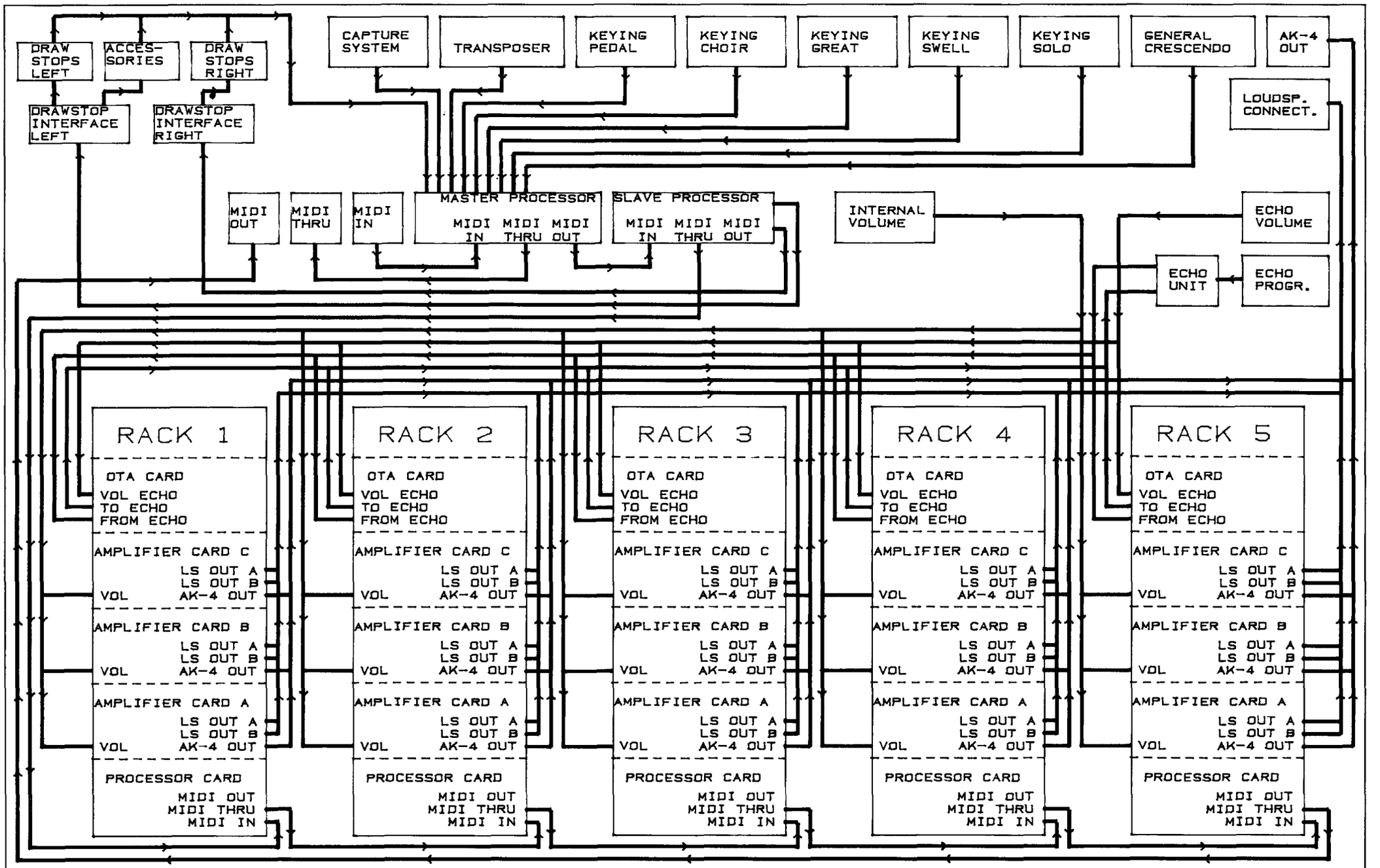

BLOCKDIAGRAM ORGAN			
DESIGN	LAB		REV.
DRAWN	VERSCHOOR	27-05-91	
JOHANNUS 300-SERIES			PAGE 1

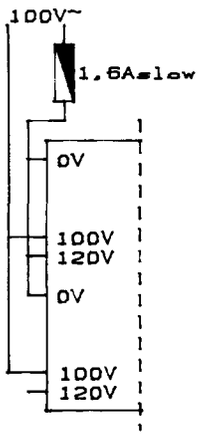

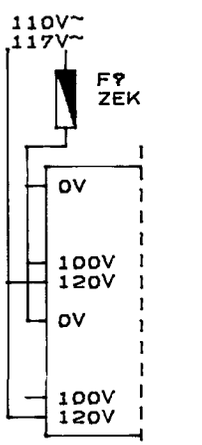

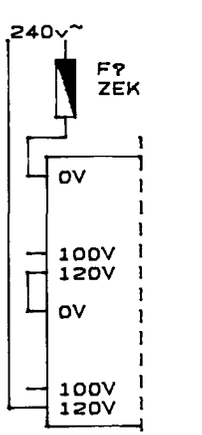

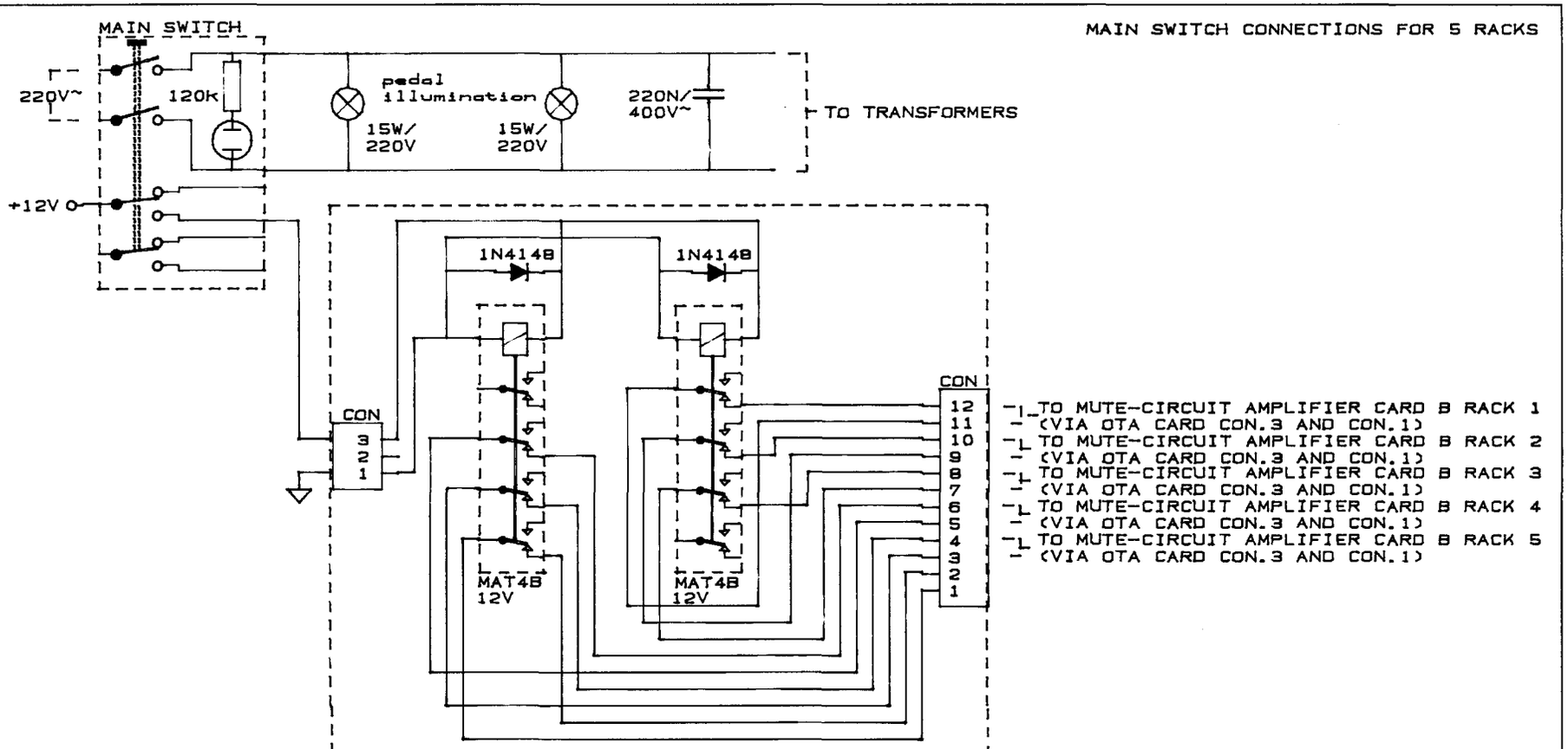

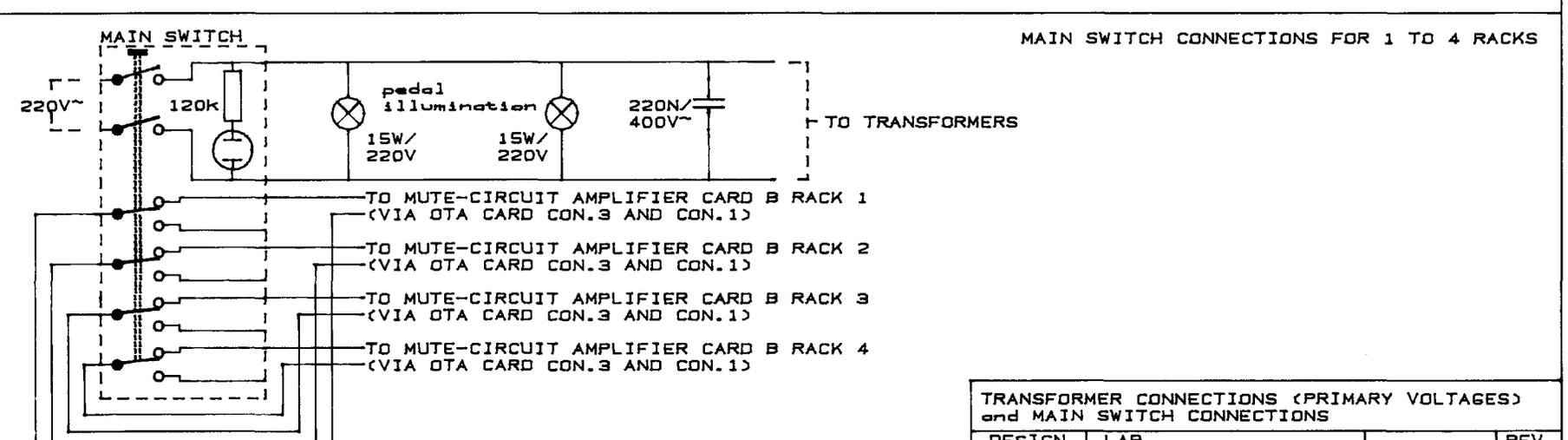

TRANSFORMER CONNECTIONS (PRIMARY VOLTAGES)
and MAIN SWITCH CONNECTIONS

DESIGN	LAB		REV.
DRAWN	VERSCHOOR	29-05-91	
JOHANNUS 300-SERIES			PAGE 2

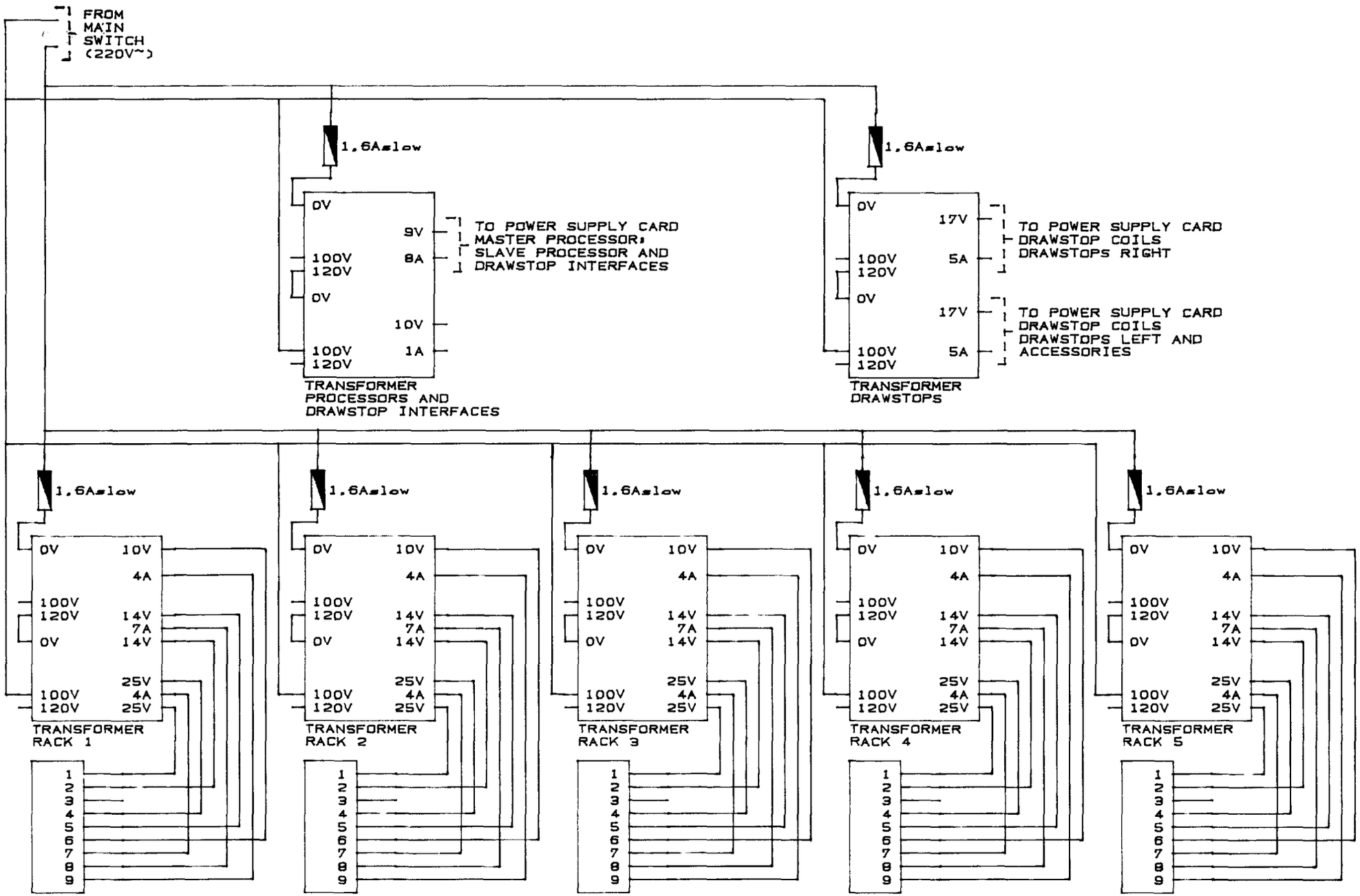

TRANSFORMER CONNECTIONS (SECUNDARY VOLTAGES)			
DESIGN	LAB		REV.
DRAWN	VERSCHOOR	28-05-91	
JOHANNUS 300-SERIES			PAGE 3

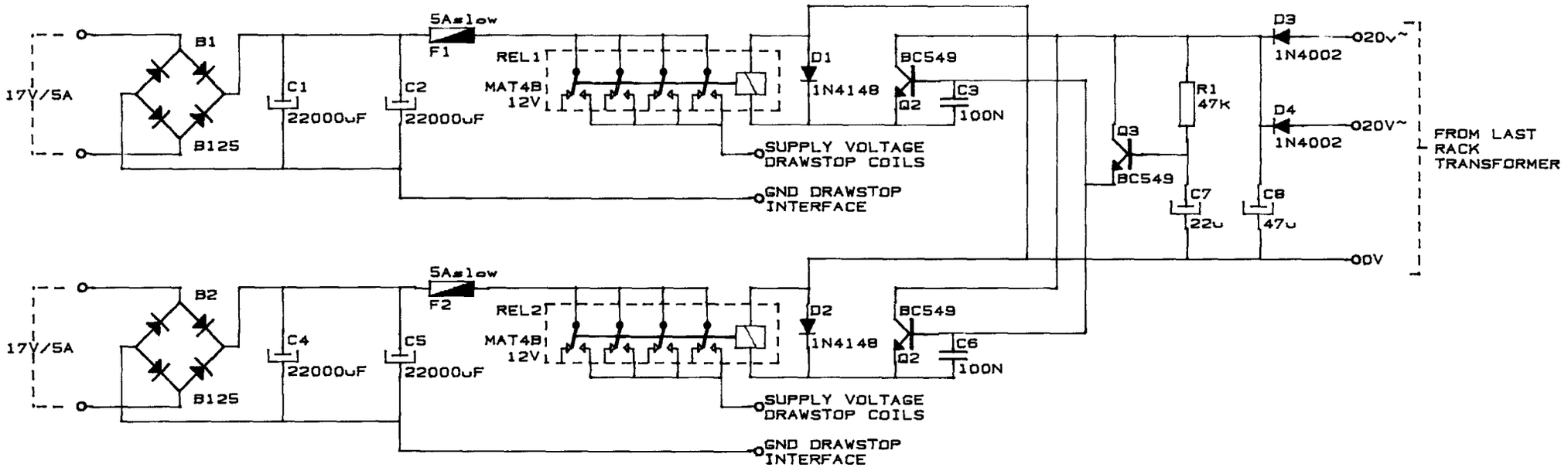

POWER SUPPLY CARD DRAWSTOPS COILS

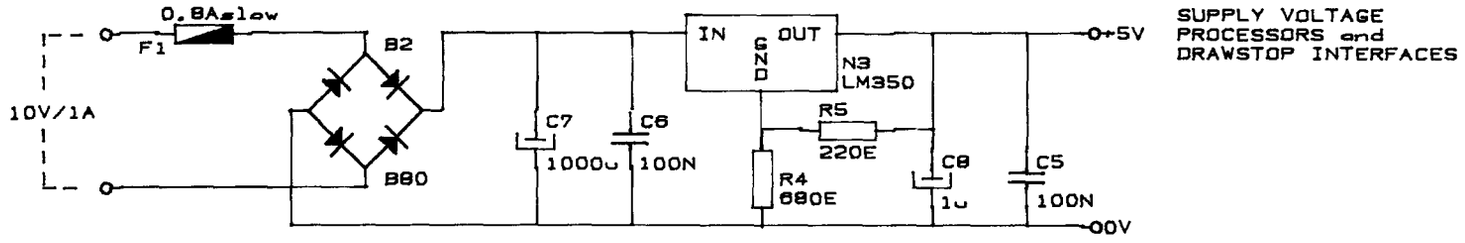

POWER SUPPLY CARD PROCESSORS AND
DRAWSTOP INTERFACES

POWER SUPPLY CARDS DRAWSTOP COILS: PROCESSORS and DRAWSTOP INTERFACES			
DESIGN	LAB		REV.
DRAWN	VERSCHOOR	30-05-91	
JOHANNUS 300-SERIES			PAGE 4

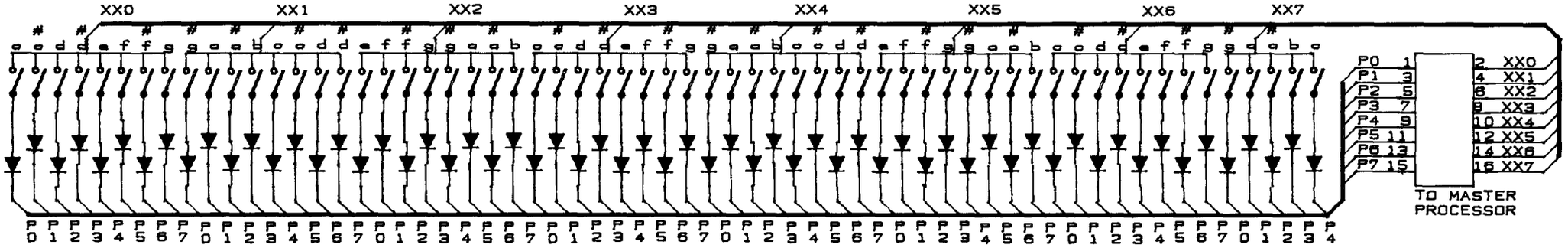

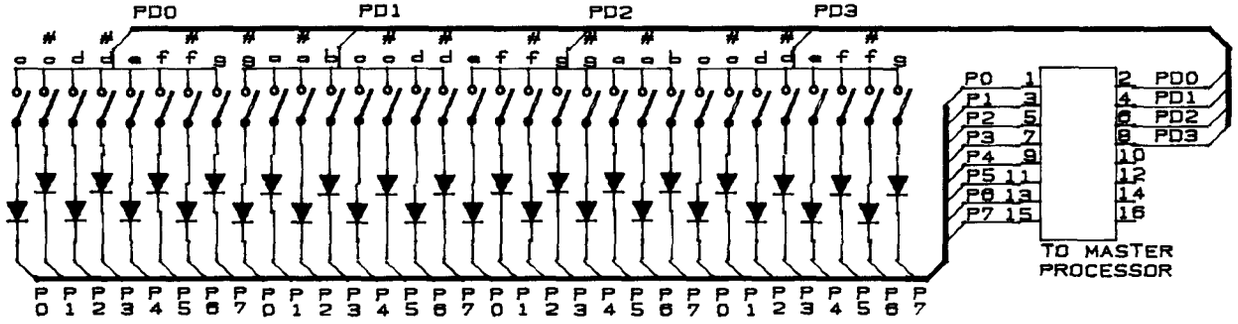

NOTE: THE NAMES FOR THE SCANNING SIGNALS
XX0 - XX7 ARE DIFFERENT FOR EACH MANUAL.
THE NAMES ARE AS FOLLOWS: CHOIR: CH0 - CH7
GREAT: GR0 - GR7
SWELL: SW0 - SW7
SOLO : SL0 - SL7

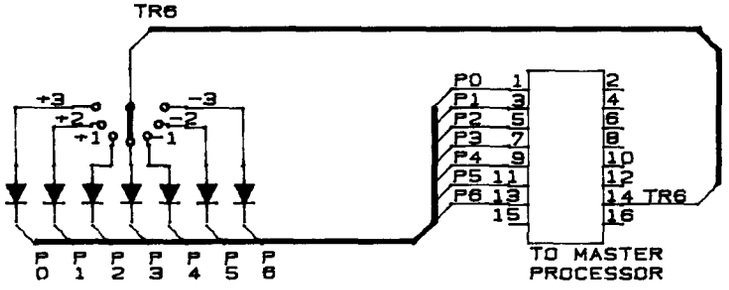

SCANNING MANUALS: PEDAL and TRANSPOSER			
DESIGN	LAB		REV.
DRAWN	VERSCHOOR	30-05-91	
JOHANNUS 300-SERIES			PAGE 5

⊠ = MAGNET

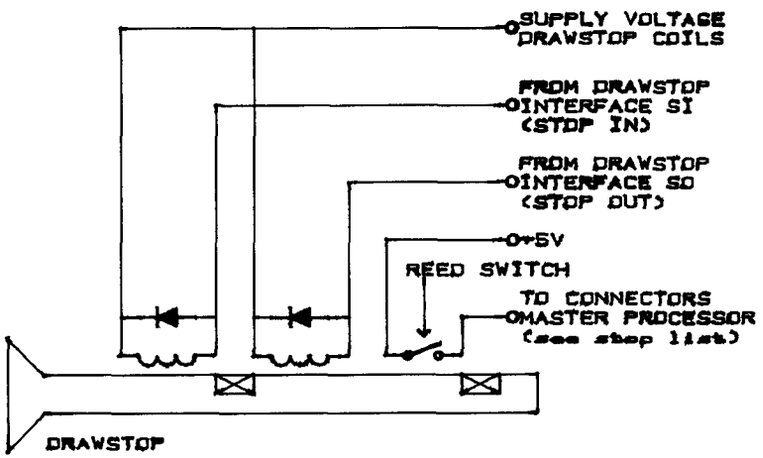

TILTING STOP

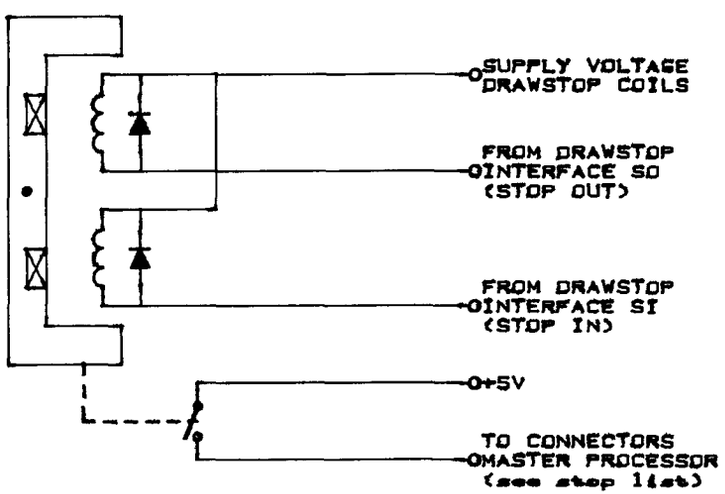

STOP LIST OPUS 325

PEDAL

		VOICENR	CON/PIN
DOUBLE BASS	16'	ST 1	10 /12
SUBBASS	16'	ST 2	10 /11
OCTAVE	8'	ST 3	10 /10
VIOLON	8'	ST 4	10 / 9
GEDACKT	8'	ST 5	10 / 8
CHORALBASS	4'	ST 6	10 / 7
MIXTURE	III	ST 7	10 / 6
BOMBARDE	32'	ST 8	10 / 5
CONTRA TRUMPET	16'	ST 9	10 / 4
TRUMPET	8'	ST10	10 / 3
CLARION	4'	ST11	10 / 2

SWELL

		VOICENR	CON/PIN
QUINTATON	16'	ST12	10 / 1
OPEN DIAPASON	8'	ST13	11 /12
VIOLA	8'	ST14	11 /11
CELESTE	8'	ST15	11 /10
STOPPED FLUTE	8'	ST16	11 / 9
OCTAVE	4'	ST17	11 / 8
RÖHRFLUTE	4'	ST18	11 / 7
FLUTE TWELFTH	2 2/3'	ST19	11 / 6
WALDFLUTE	2'	ST20	11 / 5
NAZARD	1 1/3'	ST21	11 / 4
SIFFLUTE	1'	ST22	11 / 3
SESQUIALTER	II	ST23	11 / 2
RAUSCHPFEIFE	II-IV	ST24	11 / 1
FAGOTTO	16'	ST25	9 /12
CROMORNE	8'	ST26	9 /11
VOX HUMANA	8'	ST27	9 /10

GREAT

		VOICENR	CON/PIN
BOURDON	16'	ST28	9 / 9
DIAPASON	8'	ST29	9 / 8
GAMBA	8'	ST30	9 / 7
RÖHRFLUTE	8'	ST31	9 / 6
OCTAVE	4'	ST32	9 / 5
OPEN FLUTE	4'	ST33	9 / 4
TWELFTH	2 2/3'	ST34	9 / 3
SUPEROCTAVE	2'	ST35	9 / 2
CONICAL FLUTE	2'	ST36	9 / 1
CORNET	IV	ST37	8 /12
MIXTURE	V-VII	ST38	8 /11
SCHARF	III-V	ST39	8 /10
CONTRA TRUMPET	16'	ST40	8 / 9
TRUMPET	8'	ST41	8 / 8

ACCESSORIES

	VOICENR	CON/PIN
SWELL TO GREAT	ST42	8 / 7
GREAT TO PEDAL	ST43	8 / 6
SWELL TO PEDAL	ST44	8 / 5
TREMULANT GREAT	ST45	8 / 4
TREMULANT SWELL	ST46	8 / 3
CHORUS	ST47	8 / 2

SCANNING (UNILLUMINATED) DRAWSTOPS			
DESIGN	LAB		REV.
DRAWN	VERSCHOOR	04-06-91	
JOHANNUS 300-SERIES			PAGE 8

⊠ = MAGNET

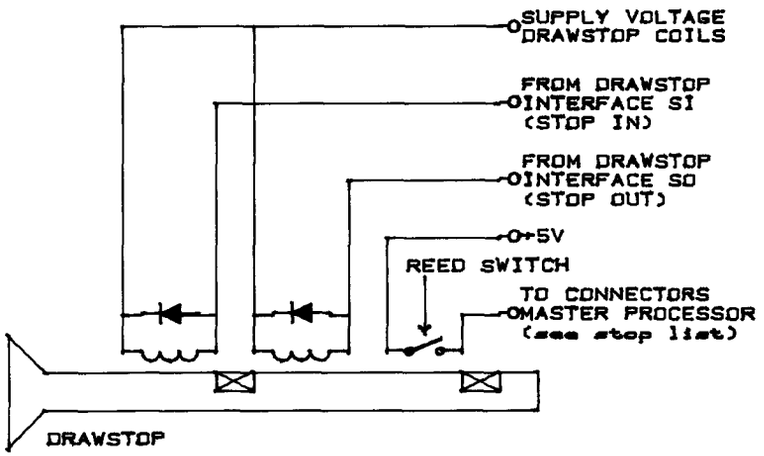

TILTING STOP

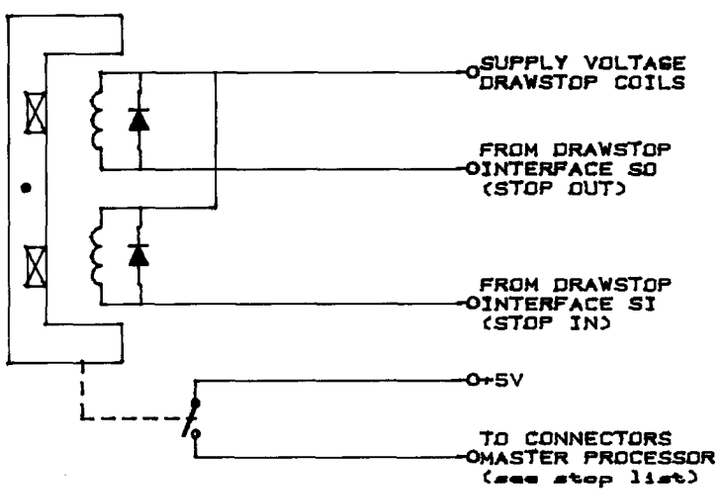

STOP LIST OPUS 335

PEDAL

		VOICENR	CON/PIN
SUBBASS	32'	ST 1	10 /12
DOUBLE BASS	16'	ST 2	10 /11
SUBBASS	16'	ST 3	10 /10
ECHO BOURDON	16'	ST 4	10 / 9
OCTAVE	8'	ST 5	10 / 8
VIOLON	8'	ST 6	10 / 7
GEDACKT	8'	ST 7	10 / 6
CHORALBASS	4'	ST 8	10 / 5
BASSFLUTE	4'	ST 9	10 / 4
MIXTURE	III	ST10	10 / 3
BOMBARDE	32'	ST11	10 / 2
CONTRA TRUMPET	16'	ST12	10 / 1
TRUMPET	8'	ST13	11 /12
CLARION	4'	ST14	11 /11

SWELL

		VOICENR	CON/PIN
QUINTATON	16'	ST15	11 /10
OPEN DIAPASON	8'	ST16	11 / 9
VIOLA	8'	ST17	11 / 8
CELESTE	8'	ST18	11 / 7
FLUTE HARMONIQUE	8'	ST19	11 / 6
STOPPED FLUTE	8'	ST20	11 / 5
OCTAVE	4'	ST21	11 / 4
GEMSHORN	4'	ST22	11 / 3
RÖHRFLUTE	4'	ST23	11 / 2
FLUTE TWELFTH	2 2/3'	ST24	11 / 1
OCTAVE	2'	ST25	9 /12
WALDFLUTE	2'	ST26	9 /11
NAZARD	1 1/3'	ST27	9 /10
OCTAVE	1'	ST28	9 / 9
SESQUIALTER	II	ST29	9 / 8
RAUSCHPFEIFE	II-IV	ST30	9 / 7
FAGOTTO	16'	ST31	9 / 6
CROMORNE	8'	ST32	9 / 5
VOX HUMANA	8'	ST33	9 / 4
SCHALMEY	4'	ST34	9 / 3

GREAT

		VOICENR	CON/PIN
BOURDON	16'	ST35	9 / 2
OPEN DIAPASON	8'	ST36	9 / 1
DIAPASON	8'	ST37	8 /12
GAMBA	8'	ST38	8 /11
RÖHRFLUTE	8'	ST39	8 /10
OCTAVE	4'	ST40	8 / 9
SALICIONAL	4'	ST41	8 / 8
OPEN FLUTE	4'	ST42	8 / 7
TWELFTH	2 2/3'	ST43	8 / 6
SUPEROCTAVE	2'	ST44	8 / 5
CONICAL FLUTE	2'	ST45	8 / 4
LARIGOT	1 1/3'	ST46	8 / 3
CORNET	IV	ST47	8 / 2
MIXTURE	V-VII	ST48	8 / 1
SCHARF	III-V	ST49	6 /12
CONTRA TRUMPET	16'	ST50	6 /11
TRUMPET	8'	ST51	6 /10
CLARION	4'	ST52	6 / 9

ACCESSORIES

	VOICENR	CON/PIN
SWELL TO GREAT	ST53	6 / 8
GREAT TO PEDAL	ST54	6 / 7
SWELL TO PEDAL	ST55	6 / 6
TREMULANT GREAT	ST56	6 / 5
TREMULANT SWELL	ST57	6 / 4
CHORUS	ST58	6 / 3

SCANNING (UNILLUMINATED) DRAWSTOPS			
DESIGN	LAB		REV.
DRAWN	VERSCHOOR	04-06-91	
JOHANNUS 300-SERIES			PAGE 6

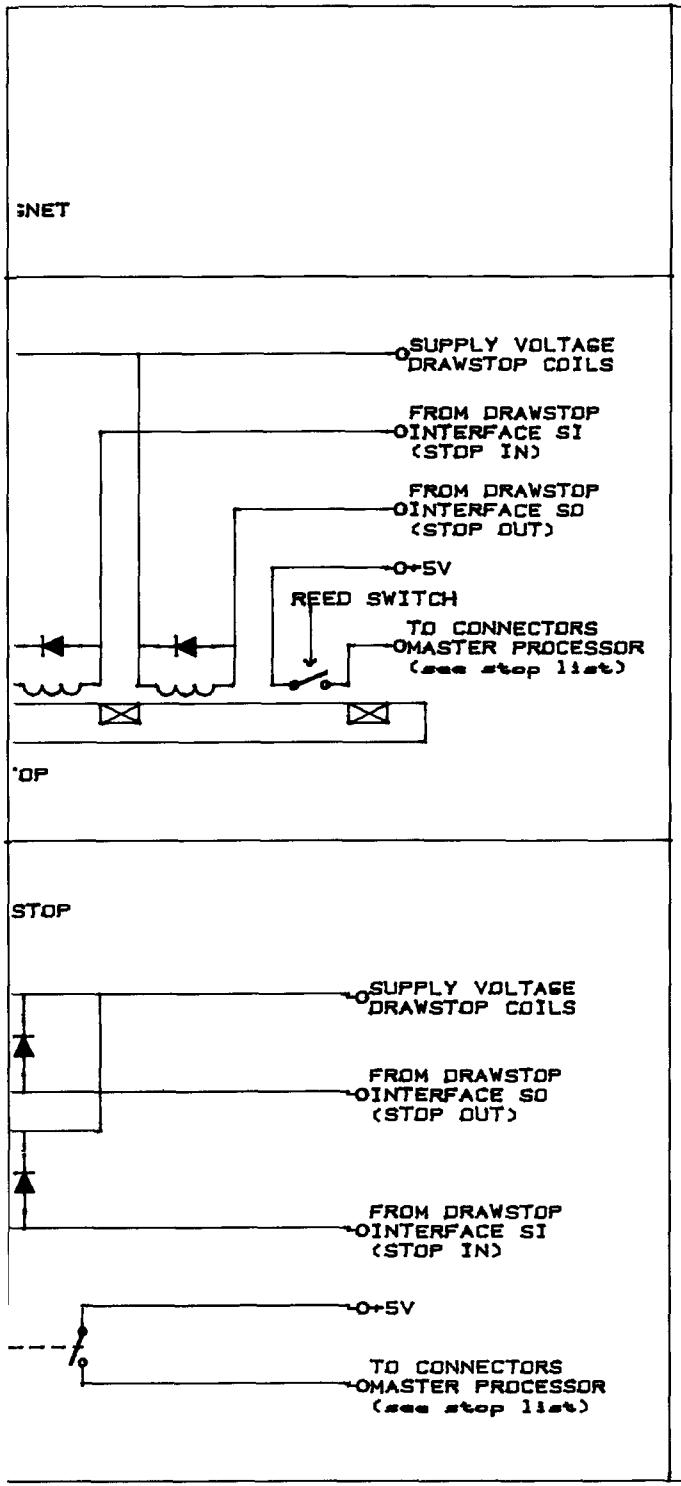

STOP LIST OPUS 355

PEDAL

		VOICENR	CON/PIN
DOUBLE BASS	16'	ST 1	10 /12
SUBBASS	16'	ST 2	10 /11
OCTAVE	8'	ST 3	10 /10
VIOLON	8'	ST 4	10 / 9
GEDACKT	8'	ST 5	10 / 8
CHORALBASS	4'	ST 6	10 / 7
MIXTURE	III	ST 7	10 / 6
BOMBARDE	32'	ST 8	10 / 5
CONTRA TRUMPET	16'	ST 9	10 / 4
TRUMPET	8'	ST10	10 / 3
CLARION	4'	ST11	10 / 2

SWELL

		VOICENR	CON/PIN
QUINTATON	16'	ST12	10 / 1
OPEN DIAPASON	8'	ST13	11 /12
VIOLA	8'	ST14	11 /11
CELESTE	8'	ST15	11 /10
STOPPED FLUTE	8'	ST16	11 / 9
OCTAVE	4'	ST17	11 / 8
RÖHRFLUTE	4'	ST18	11 / 7
FLUTE TWELFTH	2 2/3'	ST19	11 / 6
WALDFLUTE	2'	ST20	11 / 5
NAZARD	1 1/3'	ST21	11 / 4
OCTAVE	1'	ST22	11 / 3
SESQUIALTER	II	ST23	11 / 2
RAUSCHPFEIFE	II-IV	ST24	11 / 1
FAGOTTO	16'	ST25	9 /12
CROMORNE	8'	ST26	9 /11
VOX HUMANA	8'	ST27	9 /10

GREAT

		VOICENR	CON/PIN
BOURDON	16'	ST28	9 / 9
DIAPASON	8'	ST29	9 / 8
GAMBA	8'	ST30	9 / 7
RÖHRFLUTE	8'	ST31	9 / 6
OCTAVE	4'	ST32	9 / 5
OPEN FLUTE	4'	ST33	9 / 4
TWELFTH	2 2/3'	ST34	9 / 3
SUPEROCTAVE	2'	ST35	9 / 2
CONICAL FLUTE	2'	ST36	9 / 1
CORNET	IV	ST37	8 /12
MIXTURE	V-VII	ST38	8 /11
SCHARF	III-V	ST39	8 /10
CONTRA TRUMPET	16'	ST40	8 / 9
TRUMPET	8'	ST41	8 / 8

CHOIR

		VOICENR	CON/PIN
LIEBLICH GEDECKT	16'	ST42	8 / 7
BOURDON	8'	ST43	8 / 6
OCTAVE	4'	ST44	8 / 5
NACHTHORN	4'	ST45	8 / 4
NAZARD	2 2/3'	ST46	8 / 3
OCTAVE	2'	ST47	8 / 2
FLUTE	2'	ST48	8 / 1
TIERCE	1 3/5'	ST49	6 /12
SUPERQUINT	1 1/3'	ST50	6 /11
CYMBAL	II-III	ST51	6 /10
CLARINET	8'	ST52	6 / 9

ACCESSORIES

	VOICENR	CON/PIN
CHOIR TO GREAT	ST53	6 / 8
SWELL TO GREAT	ST54	6 / 7
SWELL TO CHOIR	ST55	6 / 6
CHOIR TO PEDAL	ST56	6 / 5
GREAT TO PEDAL	ST57	6 / 4
SWELL TO PEDAL	ST58	6 / 3
TREMULANT CHOIR	ST59	6 / 2
TREMULANT GREAT	ST60	6 / 1
TREMULANT SWELL	ST61	7 /12
CHORUS	ST62	7 /11

SCANNING (UNILLUMINATED) DRAWSTOPS

DESIGN	LAB		REV.
DRAWN	VERSCHOOR	04-08-91	
JOHANNUS 300-SERIES			PAGE 6

⊠ = MAGNET

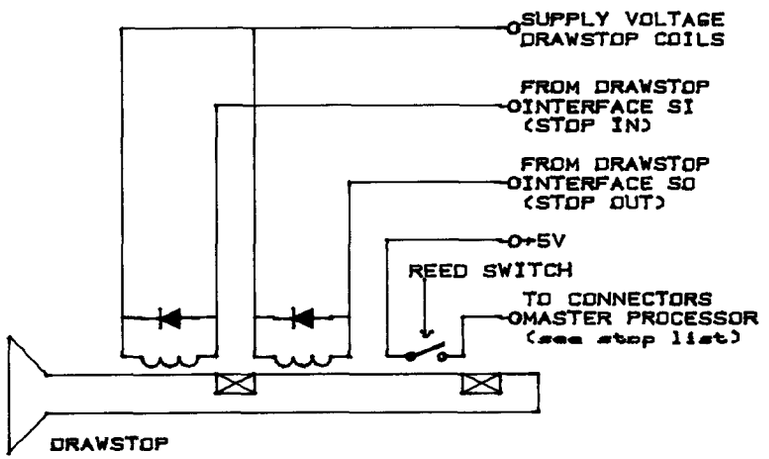

TILTING STOP

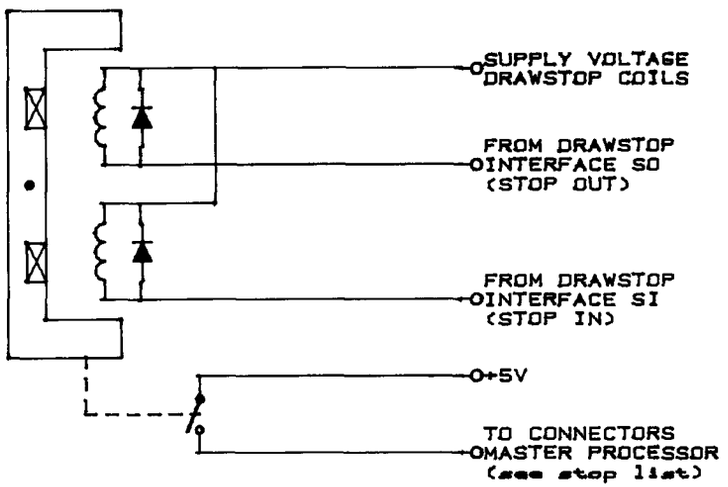

STOP LIST OPUS 365

PEDAL

		VOICENR	CON/PIN
SUBBASS	32'	ST 1	10 /12
DOUBLE BASS	16'	ST 2	10 /11
SUBBASS	16'	ST 3	10 /10
ECHO BOURDON	16'	ST 4	10 / 9
PRESTANT	8'	ST 5	10 / 8
VIOLON	8'	ST 6	10 / 7
GEDACKT	8'	ST 7	10 / 6
CHORALBASS	4'	ST 8	10 / 5
BASSFLUTE	4'	ST 9	10 / 4
MIXTURE	III	ST10	10 / 3
BOMBARDE	32'	ST11	10 / 2
CONTRA TRUMPET	16'	ST12	10 / 1
TRUMPET	8'	ST13	11 /12
CLARION	4'	ST14	11 /11

SWELL

		VOICENR	CON/PIN
QUINTATON	16'	ST15	11 /10
OPEN DIAPASON	8'	ST16	11 / 9
VIOLA	8'	ST17	11 / 8
CELESTE	8'	ST18	11 / 7
FLUTE HARMONIQUE	8'	ST19	11 / 6
STOPPED FLUTE	8'	ST20	11 / 5
OCTAVE	4'	ST21	11 / 4
GEMSHORN	4'	ST22	11 / 3
RÖHRFLUTE	4'	ST23	11 / 2
FLUTE TWELFTH	2 2/3'	ST24	11 / 1
OCTAVE	2'	ST25	9 /12
WALDFLUTE	2'	ST26	9 /11
NAZARD	1 1/3'	ST27	9 /10
OCTAVE	1'	ST28	9 / 9
SESQUIALTER	II	ST29	9 / 8
RAUSCHPFEIFE	II-IV	ST30	9 / 7
FAGOTTO	16'	ST31	9 / 6
CROMORNE	8'	ST32	9 / 5
VOX HUMANA	8'	ST33	9 / 4
SCHALMEY	4'	ST34	9 / 3

GREAT

		VOICENR	CON/PIN
BOURDON	16'	ST35	9 / 2
OPEN DIAPASON	8'	ST36	9 / 1
DIAPASON	8'	ST37	8 /12
GAMBA	8'	ST38	8 /11
RÖHRFLUTE	8'	ST39	8 /10
OCTAVE	4'	ST40	8 / 9
SALICIONAL	4'	ST41	8 / 8
OPEN FLUTE	4'	ST42	8 / 7
TWELFTH	2 2/3'	ST43	8 / 6
SUPEROCTAVE	2'	ST44	8 / 5
CONICAL FLUTE	2'	ST45	8 / 4
LARIGOT	1 1/3'	ST46	8 / 3
CORNET	IV	ST47	8 / 2
MIXTURE	V-VII	ST48	8 / 1
SCHARF	III-V	ST49	6 /12
CONTRA TRUMPET	16'	ST50	6 /11
TRUMPET	8'	ST51	6 /10
CLARION	4'	ST52	6 / 9

CHOIR

		VOICENR	CON/PIN
LIEBLICH GEDECKT	16'	ST53	6 / 8
BOURDON	8'	ST54	6 / 7
OCTAVE	4'	ST55	6 / 6
NACHTHORN	4'	ST56	6 / 5
NAZARD	2 2/3'	ST57	6 / 4
OCTAVE	2'	ST58	6 / 3
FLUTE	2'	ST59	6 / 2
TIERCE	1 3/5'	ST60	6 / 1
SUPERQUINT	1 1/3'	ST61	7 /12
SIFFLUTE	1'	ST62	7 /11
CYMBAL	II-III	ST63	7 /10
CROMORNE	16'	ST64	7 / 9
CLARINET	8'	ST65	7 / 8

ACCESSORIES

	VOICENR	CON/PIN
CHOIR TO GREAT	ST66	7 / 7
SWELL TO GREAT	ST67	7 / 6
SWELL TO CHOIR	ST68	7 / 5
CHOIR TO PEDAL	ST69	7 / 4
GREAT TO PEDAL	ST70	7 / 3
SWELL TO PEDAL	ST71	7 / 2
TREMULANT CHOIR	ST72	7 / 1
TREMULANT GREAT	ST73	4 /12
TREMULANT SWELL	ST74	4 /11
CHORUS	ST75	4 /10

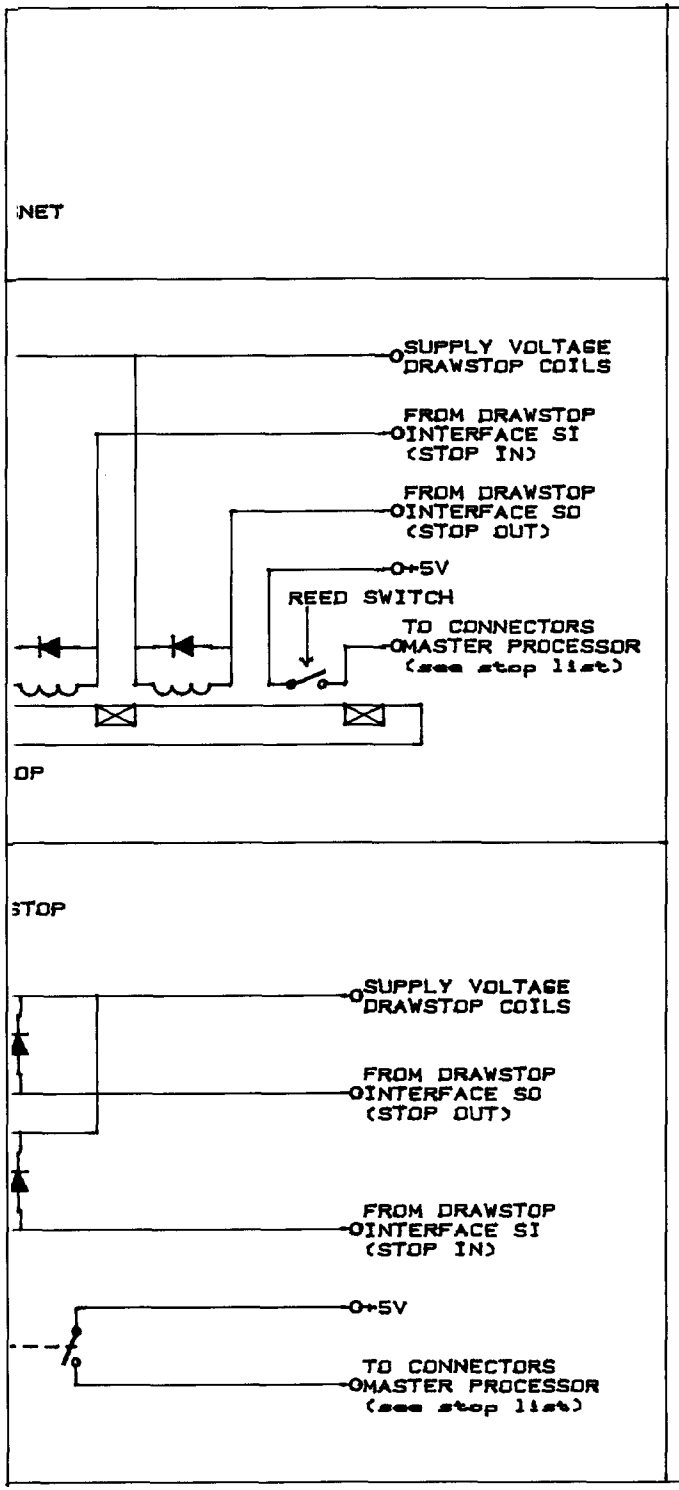

STOP LIST OPUS 485

PEDAL

		VOICENR	CON/PIN
SUBBASS	32'	ST 1	10 /12
DOUBLE BASS	16'	ST 2	10 /11
SUBBASS	16'	ST 3	10 /10
ECHO BOURDON	16'	ST 4	10 / 9
PRESTANT	8'	ST 5	10 / 8
VIOLON	8'	ST 6	10 / 7
GEDACKT	8'	ST 7	10 / 6
CHORALBASS	4'	ST 8	10 / 5
BASSFLUTE	4'	ST 9	10 / 4
MIXTURE	III	ST10	10 / 3
BOMBARDE	32'	ST11	10 / 2
CONTRA TRUMPET	16'	ST12	10 / 1
TRUMPET	8'	ST13	11 /12
CLARION	4'	ST14	11 /11

SWELL

		VOICENR	CON/PIN
QUINTATON	16'	ST15	11 /10
OPEN DIAPASON	8'	ST16	11 / 9
VIOLA	8'	ST17	11 / 8
CELESTE	8'	ST18	11 / 7
FLUTE HARMONIQUE	8'	ST19	11 / 6
STOPPED FLUTE	8'	ST20	11 / 5
OCTAVE	4'	ST21	11 / 4
GEMSHORN	4'	ST22	11 / 3
RÖHRFLUTE	4'	ST23	11 / 2
FLUTE TWELFTH	2 2/3'	ST24	11 / 1
OCTAVE	2'	ST25	9 /12
WALDFLUTE	2'	ST26	9 /11
NAZARD	1 1/3'	ST27	9 /10
OCTAVE	1'	ST28	9 / 9
SESQUIALTER	II	ST29	9 / 8
RAUSCHPFEIFE	II-IV	ST30	9 / 7
FAGOTTO	16'	ST31	9 / 6
CROMORNE	8'	ST32	9 / 5
VOX HUMANA	8'	ST33	9 / 4
SCHALMEY	4'	ST34	9 / 3

GREAT

		VOICENR	CON/PIN
BOURDON	16'	ST35	9 / 2
OPEN DIAPASON	8'	ST36	9 / 1
DIAPASON	8'	ST37	8 /12
GAMBA	8'	ST38	8 /11
RÖHRFLUTE	8'	ST39	8 /10
OCTAVE	4'	ST40	8 / 9
SALICIONAL	4'	ST41	8 / 8
OPEN FLUTE	4'	ST42	8 / 7
TWELFTH	2 2/3'	ST43	8 / 6
SUPEROCTAVE	2'	ST44	8 / 5
CONICAL FLUTE	2'	ST45	8 / 4
LARIGOT	1 1/3'	ST46	8 / 3
CORNET	IV	ST47	8 / 2
MIXTURE	V-VII	ST48	8 / 1
SCHARF	III-V	ST49	6 /12
CONTRA TRUMPET	16'	ST50	6 /11
TRUMPET	8'	ST51	6 /10
CLARION	4'	ST52	6 / 9

CHOIR

		VOICENR	CON/PIN
LIEBLICH GEDECKT	16'	ST53	6 / 8
BOURDON	8'	ST54	6 / 7
OCTAVE	4'	ST55	6 / 6
NACHTHORN	4'	ST56	6 / 5
NAZARD	2 2/3'	ST57	6 / 4
OCTAVE	2'	ST58	6 / 3
FLUTE	2'	ST59	6 / 2
TIERCE	1 3/5'	ST60	6 / 1
SUPERQUINT	1 1/3'	ST61	7 /12
SIFFLUTE	1'	ST62	7 /11
CYMBAL	II-III	ST63	7 /10
CROMORNE	16'	ST64	7 / 9
CLARINET	8'	ST65	7 / 8

SOLO

		VOICENR	CON/PIN
CONICAL FLUTE	16'	ST66	7 / 7
OPEN DIAPASON	8'	ST67	7 / 6
PRINCIPAL	8'	ST68	7 / 5
UNDA MARIS	8'	ST69	7 / 4
ORCESTRAL FLUTE	8'	ST70	7 / 3
OCTAVE	4'	ST71	7 / 2
CONCERT FLUTE	4'	ST72	7 / 1
NAZARD	2 2/3'	ST73	4 /12
OCTAVE	2'	ST74	4 /11
FLUTE	2'	ST75	4 /10
LARIGOT	1 1/3'	ST76	4 / 9
SIFFLET	1'	ST77	4 / 8
MIXTURE	V-IX	ST78	4 / 7
CYMBAL	III	ST79	4 / 6
BOMBARDE HARMONIQUE	16'	ST80	4 / 5
TRUMPET HARMONIQUE	8'	ST81	4 / 4
CLARION HARMONIQUE	4'	ST82	4 / 3
ORCESTRAL OBOE	8'	ST83	4 / 2
ORCESTRAL CLARINET	8'	ST84	4 / 1
TUBA	8'	ST85	5 /12

ACCESSORIES

	VOICENR	CON/PIN
CHOIR TO GREAT	ST86	5 /11
SWELL TO GREAT	ST87	5 /10
SOLO TO GREAT	ST88	5 / 9
SWELL TO CHOIR	ST89	5 / 8
CHOIR TO PEDAL	ST90	5 / 7
GREAT TO PEDAL	ST91	5 / 6
SWELL TO PEDAL	ST92	5 / 5
SOLO TO PEDAL	ST93	5 / 4
TREMULANT CHOIR	ST94	5 / 3
TREMULANT GREAT	ST95	5 / 2
TREMULANT SWELL	ST96	5 / 1
TREMULANT SOLO	ST97	2 /12
CHORUS	ST98	2 /11

SCANNING (UNILLUMINATED) DRAWSTOPS

DESIGN	LAB		REV.
DRAWN	VERSCHOOR	04-08-91	
JOHANNUS 300-SERIES			PAGE 6

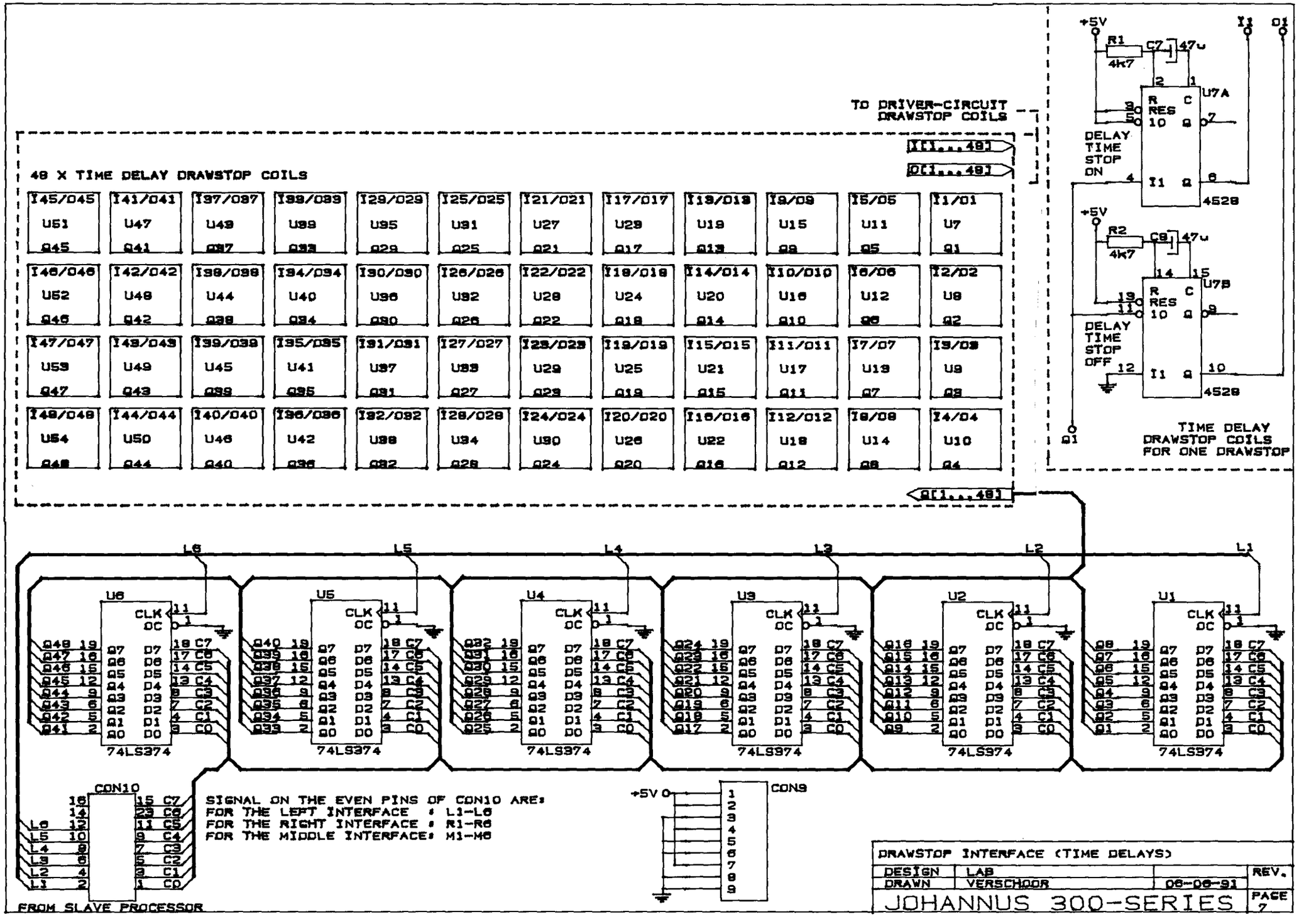
TO DRIVER-CIRCUIT DRAWSTOP COILS
I[1...48]
Q[1...48]
48 X TIME DELAY DRAWSTOP COILS
I45/045 U51 Q45
I41/041 U47 Q41
I37/037 U43 Q37
I33/033 U39 Q33
I29/029 U35 Q29
I25/025 U31 Q25
I21/021 U27 Q21
I17/017 U23 Q17
I13/013 U19 Q13
I9/09 U15 Q9
I5/05 U11 Q5
I1/01 U7 Q1
I46/046 U52 Q46
I42/042 U48 Q42
I38/038 U44 Q38
I34/034 U40 Q34
I30/030 U36 Q30
I26/026 U32 Q26
I22/022 U28 Q22
I18/018 U24 Q18
I14/014 U20 Q14
I10/010 U16 Q10
I6/06 U12 Q6
I2/02 U8 Q2
I47/047 U53 Q47
I43/043 U49 Q43
I39/039 U45 Q39
I35/035 U41 Q35
I31/031 U37 Q31
I27/027 U33 Q27
I23/023 U29 Q23
I19/019 U25 Q19
I15/015 U21 Q15
I11/011 U17 Q11
I7/07 U13 Q7
I3/03 U9 Q3
I48/048 U54 Q48
I44/044 U50 Q44
I40/040 U46 Q40
I36/036 U42 Q36
I32/032 U38 Q32
I28/028 U34 Q28
I24/024 U30 Q24
I20/020 U26 Q20
I16/016 U22 Q16
I12/012 U18 Q12
I8/08 U14 Q8
I4/04 U10 Q4
+5V
R1 4k7
C7 47u
U7A
R RES C
10 Q
DELAY TIME STOP ON
I1 Q
4528
R2 4k7
C8 47u
U7B
DELAY TIME STOP OFF
TIME DELAY DRAWSTOP COILS FOR ONE DRAWSTOP
Q[1...48]
L6 L5 L4 L3 L2 L1
U6 U5 U4 U3 U2 U1
CLK OC
74LS374
CON10
SIGNAL ON THE EVEN PINS OF CON10 ARE:
FOR THE LEFT INTERFACE : L1-L6
FOR THE RIGHT INTERFACE : R1-R6
FOR THE MIDDLE INTERFACE: M1-M6
FROM SLAVE PROCESSOR
CON9
DRAWSTOP INTERFACE (TIME DELAYS)
DESIGN LAB
DRAWN VERSCHOOR 06-06-91
REV.
JOHANNUS 300-SERIES
PAGE 7

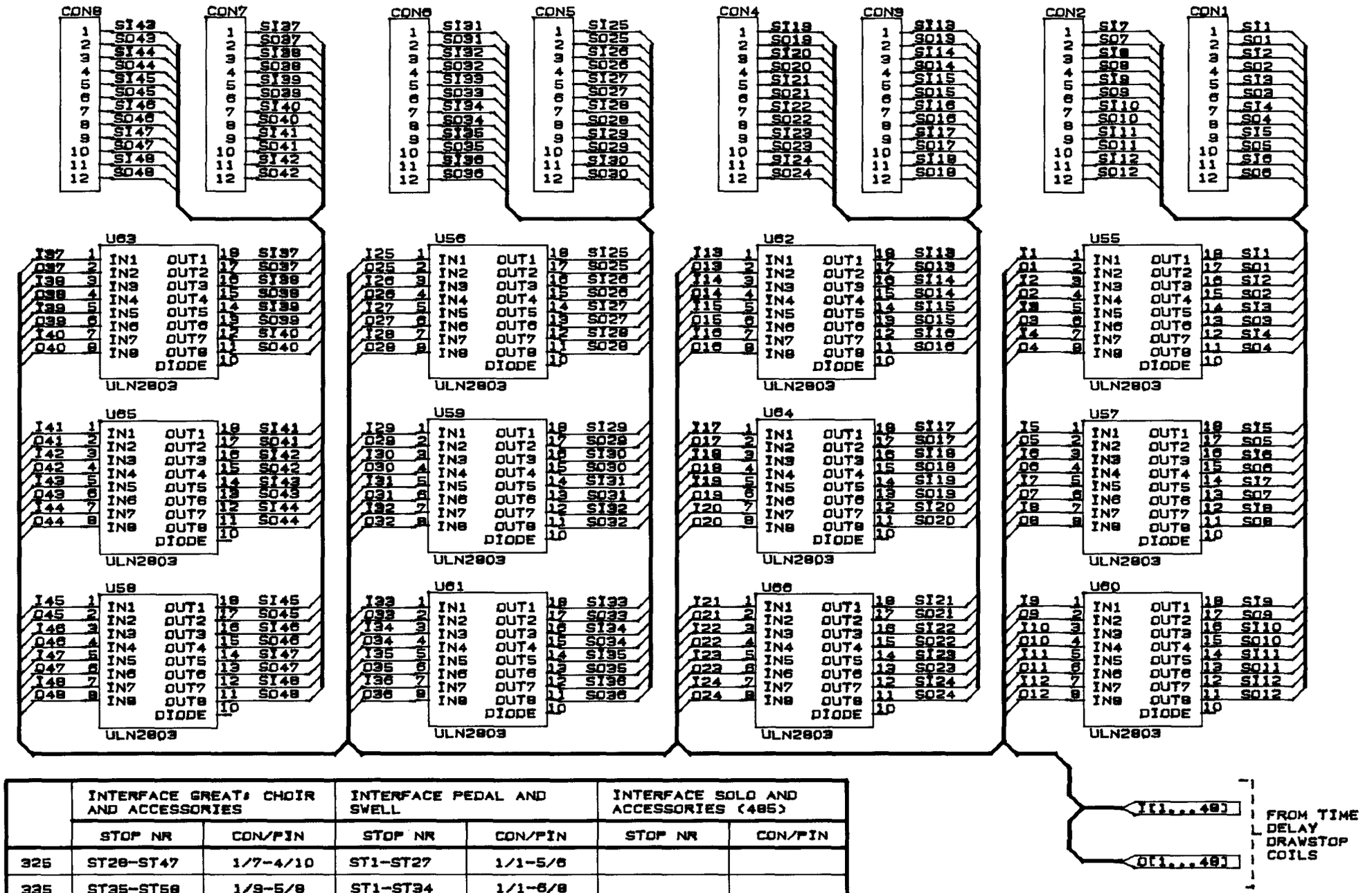

	INTERFACE GREAT: CHOIR AND ACCESSORIES		INTERFACE PEDAL AND SWELL		INTERFACE SOLO AND ACCESSORIES (485)	
	STOP NR	CON/PIN	STOP NR	CON/PIN	STOP NR	CON/PIN
325	ST28-ST47	1/7-4/10	ST1-ST27	1/1-5/6		
335	ST35-ST58	1/9-5/8	ST1-ST34	1/1-6/8		
355	ST28-ST62	1/7-7/4	ST1-ST27	1/1-5/6		
365	ST35-ST75	1/9-8/6	ST1-ST34	1/1-6/8		
485	ST35-ST65	1/9-6/10	ST1-ST34	1/1-6/8	ST66-ST98	1/11-7/4

DRAWSTOP INTERFACE (DRIVER CIRCUIT DRAWSTOP COILS)

DESIGN	LAB		REV.
DRAWN	VERSCHOOR	05-06-91	
JOHANNUS 300-SERIES			PAGE 8

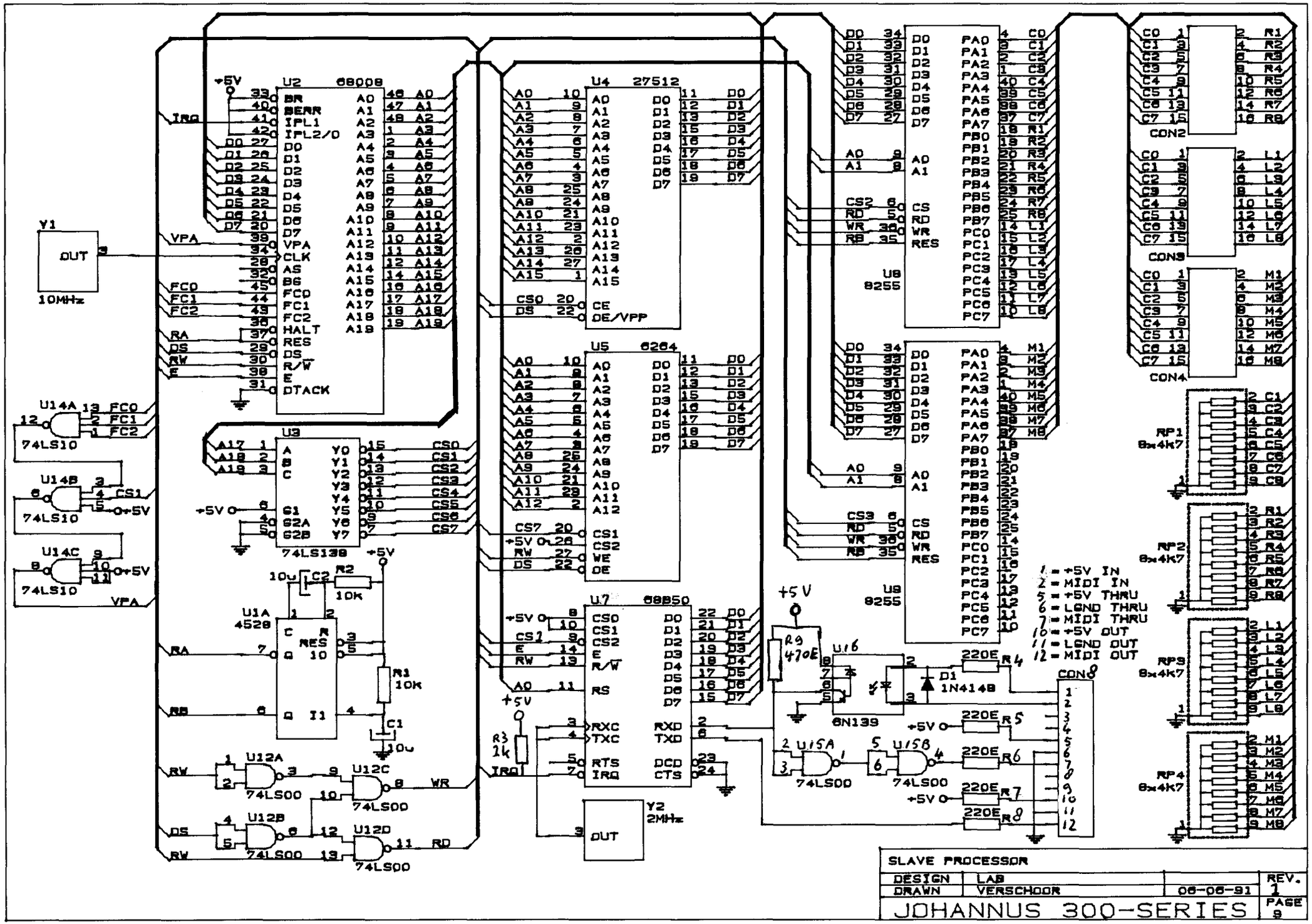
U2 68008
U4 27512
U5 6264
U7 68B50
U8 8255
U9 8255
U3 74LS138
U1A 4528
U14A 74LS10
U14B 74LS10
U14C 74LS10
U12A 74LS00
U12B 74LS00
U12C 74LS00
U12D 74LS00
U15A 74LS00
U15B 74LS00
U16 6N139
Y1 10MHz
Y2 2MHz
CON2
CON3
CON4
CON8
RP1 8x4k7
RP2 8x4k7
RP3 8x4k7
RP4 8x4k7
1 = +5V IN
2 = MIDI IN
5 = +5V THRU
6 = GND THRU
7 = MIDI THRU
10 = +5V OUT
11 = GND OUT
12 = MIDI OUT
SLAVE PROCESSOR
DESIGN LAB
DRAWN VERSCHOOR 06-06-91
REV. 1
JOHANNUS 300-SERIES
PAGE 9

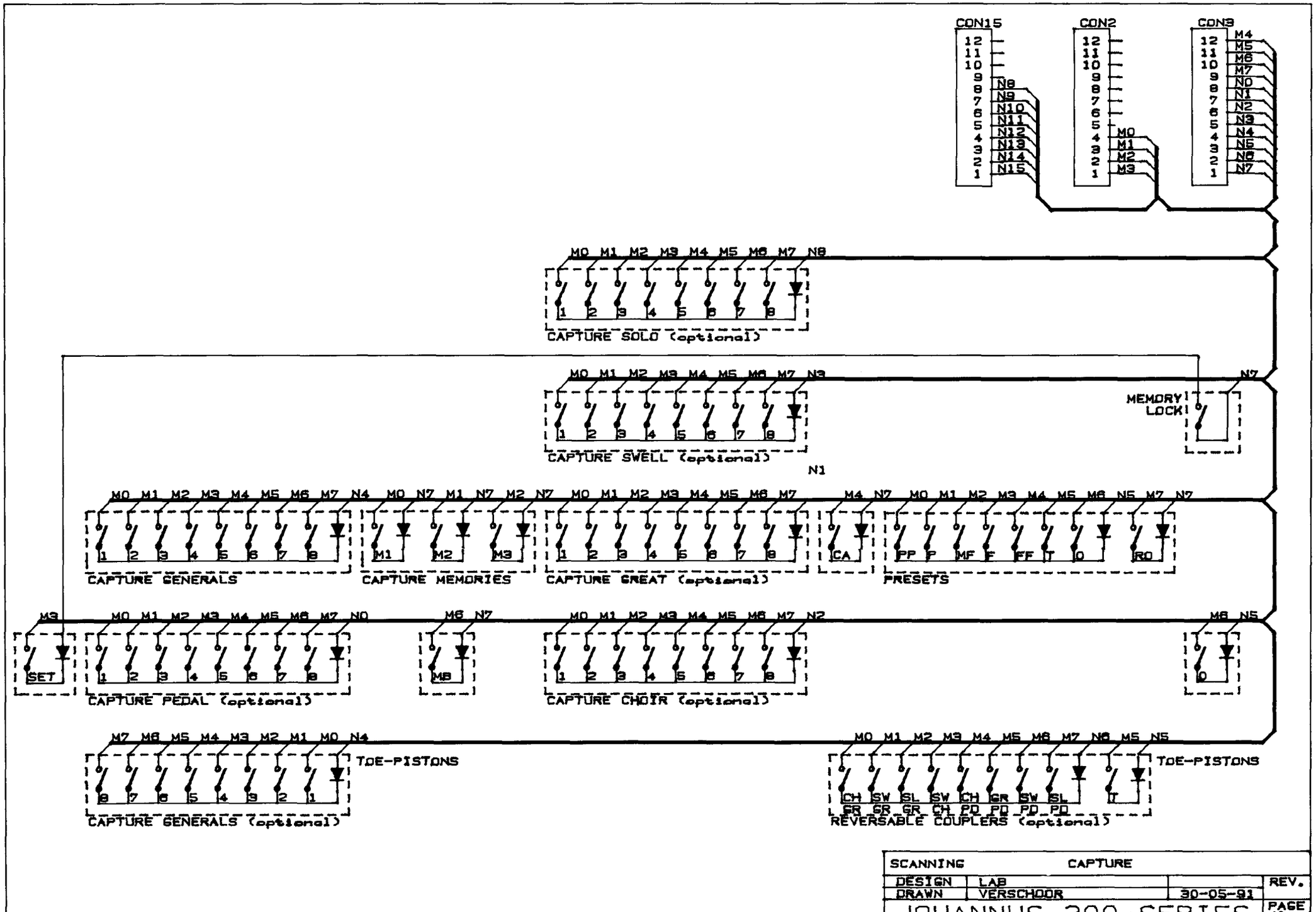
CON15
CON2
CON3
CAPTURE SOLO (optional)
CAPTURE SWELL (optional)
MEMORY LOCK
CAPTURE GENERALS
CAPTURE MEMORIES
CAPTURE GREAT (optional)
PRESETS
CAPTURE PEDAL (optional)
CAPTURE CHOIR (optional)
TOE-PISTONS
CAPTURE GENERALS (optional)
TOE-PISTONS
REVERSABLE COUPLERS (optional)
SCANNING
CAPTURE
DESIGN
LAB
REV.
DRAWN
VERSCHOOR
30-05-91
JOHANNUS 300-SERIES
PAGE 10

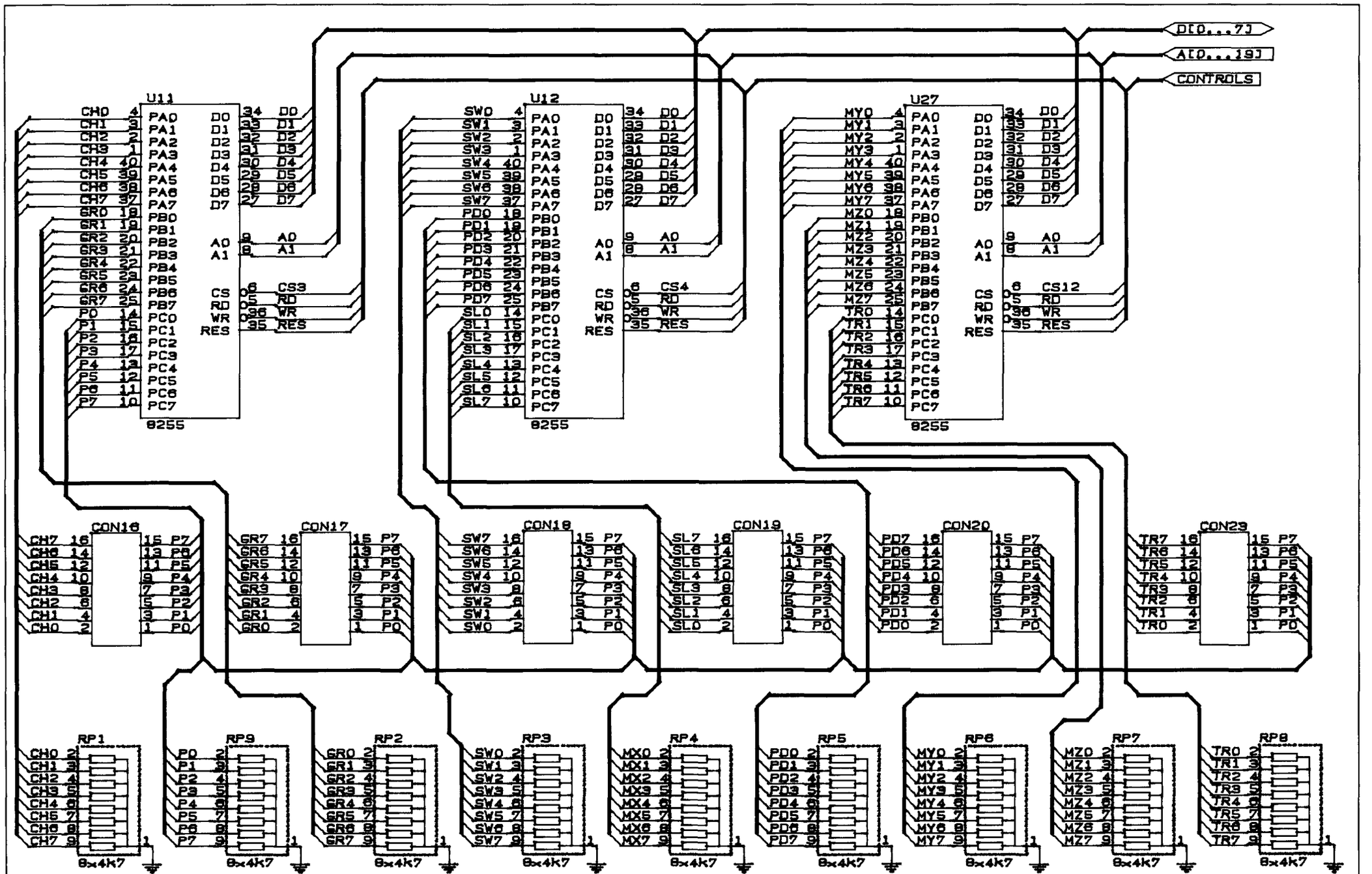

INPUT KEYING and TRANSPOSER (master proc.)

DESIGN	LAB		REV.
DRAWN	VERSCHOOR	07-06-91	
JOHANNUS 300-SERIES			PAGE 11

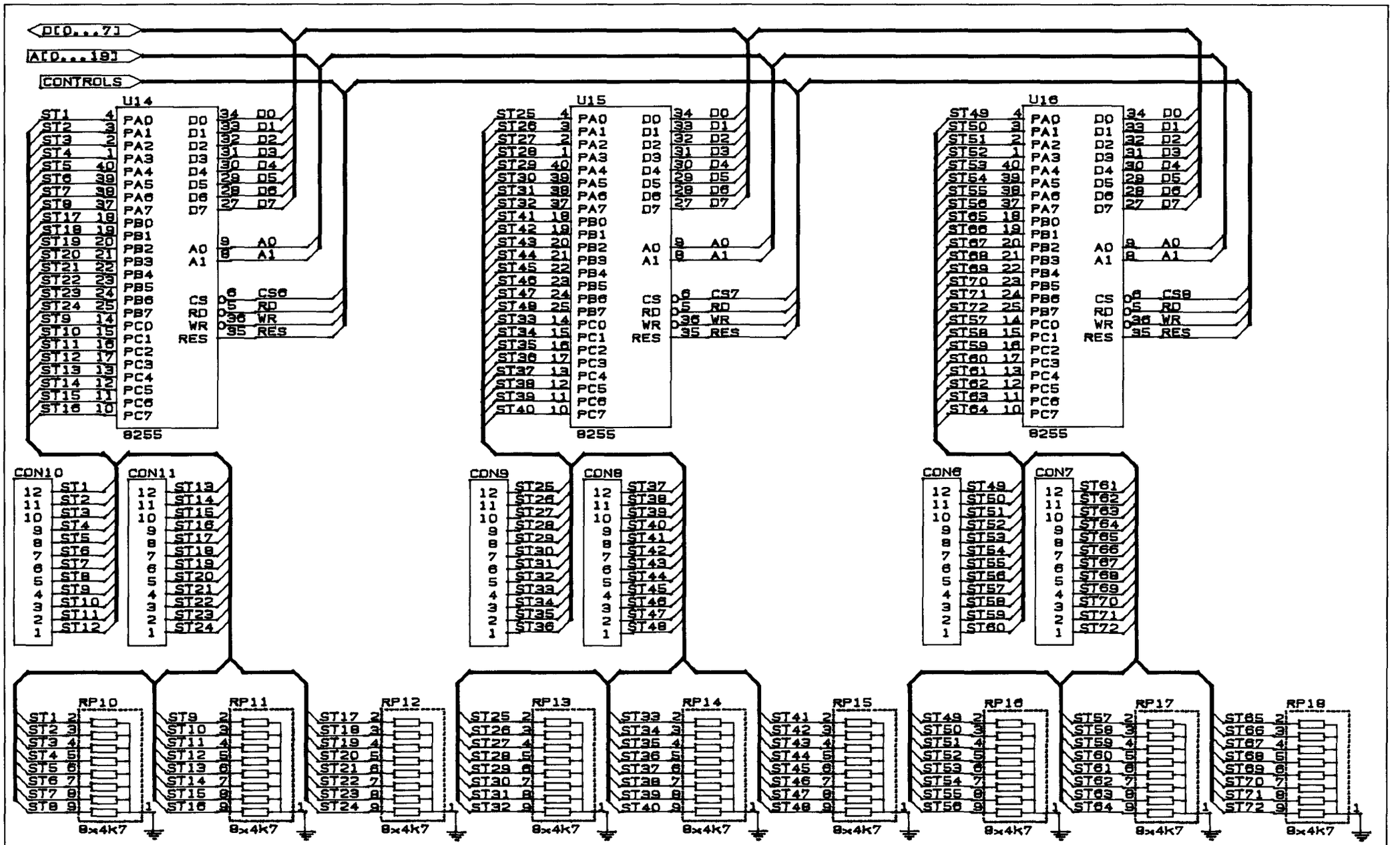

INPUT STOPS 1-72 (master proc.)

DESIGN	LAB		REV.
DRAWN	VERSCHOOR	07-06-91	
JOHANNUS 300-SERIES			PAGE 12

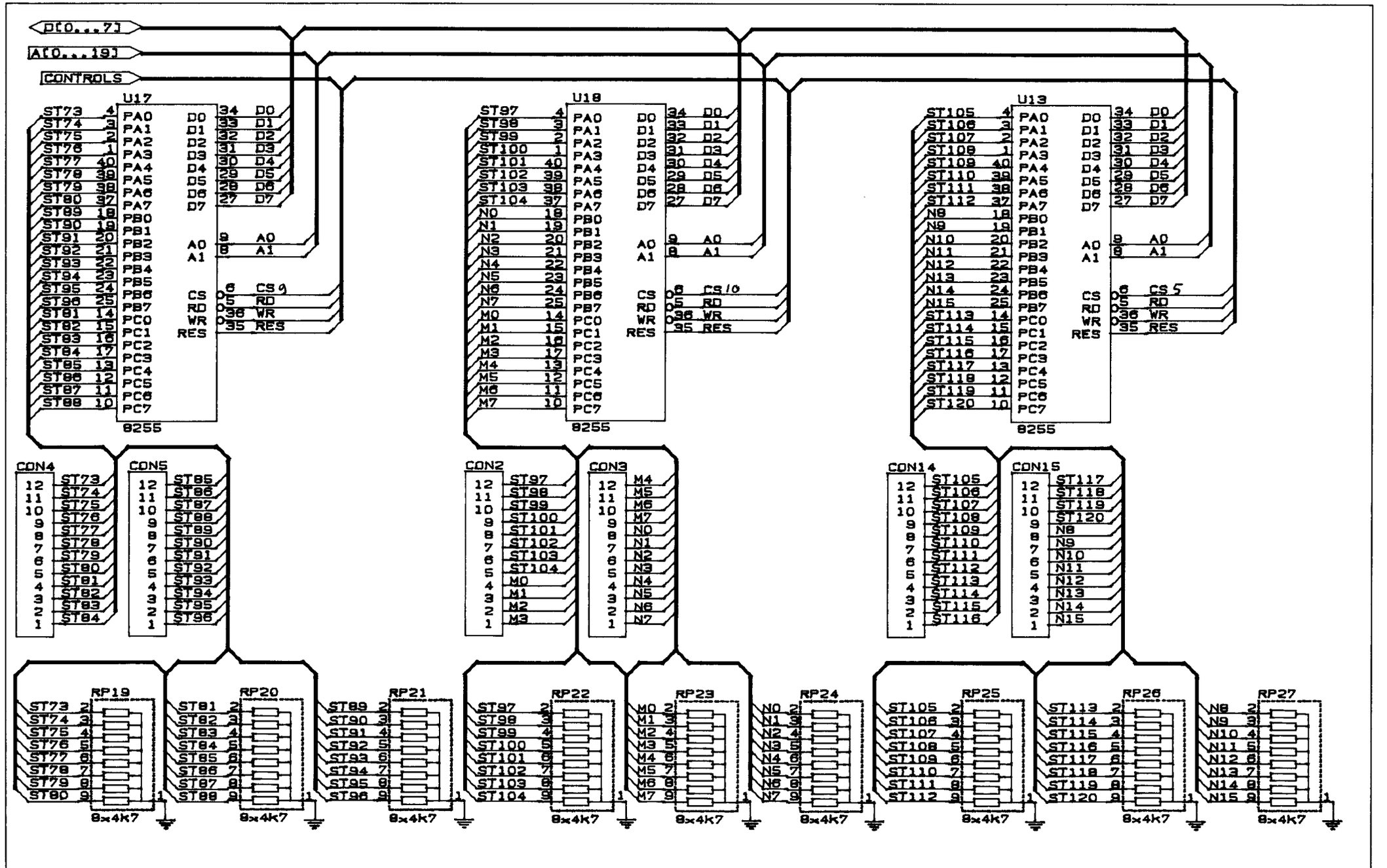

INPUT STOPS 73-120 and CAPTURE SYSTEM
(master proc.)

DESIGN	LAB		REV.
DRAWN	VERSCHOOR	10-06-91	1
JOHANNUS 300-SERIES			PAGE 13

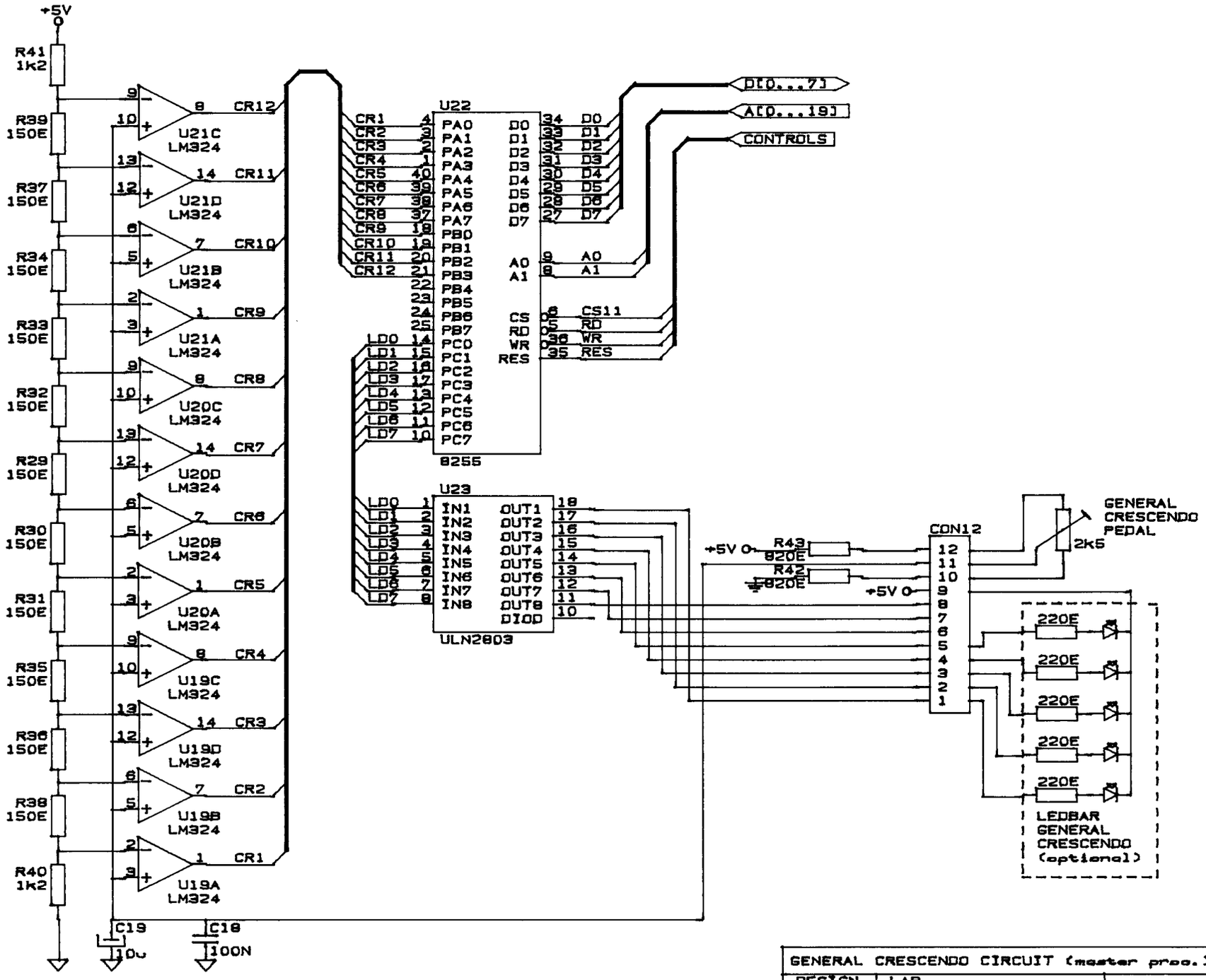

GENERAL CRESCENDO CIRCUIT (master proc.)			
DESIGN	LAB		REV.
DRAWN	VERSCHOOR	10-06-91	
JOHANNUS 300-SERIES			PAGE 14

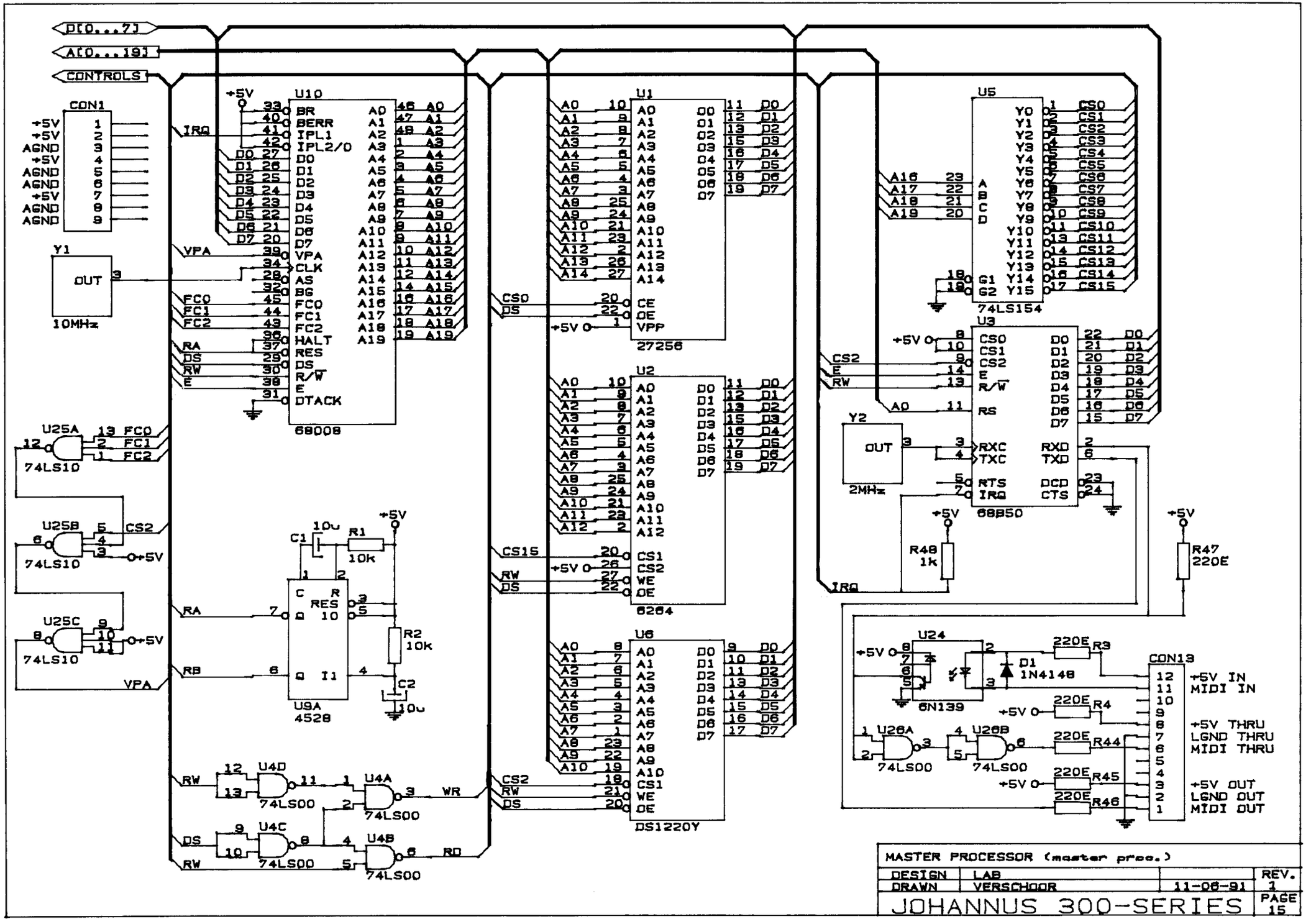
D[0...7]
A[0...19]
CONTROLS
CON1
Y1
OUT
10MHz
U10
68008
U1
27256
U2
6264
U6
DS1220Y
U5
74LS154
U3
68B50
Y2
2MHz
U25A
U25B
U25C
74LS10
U9A
4528
U4D
U4C
U4A
U4B
74LS00
U24
6N139
U26A
U26B
CON13
+5V IN
MIDI IN
+5V THRU
LGND THRU
MIDI THRU
+5V OUT
LGND OUT
MIDI OUT
MASTER PROCESSOR (master proc.)
DESIGN LAB
DRAWN VERSCHOOR
11-06-91
REV. 1
JOHANNUS 300-SERIES
PAGE 15

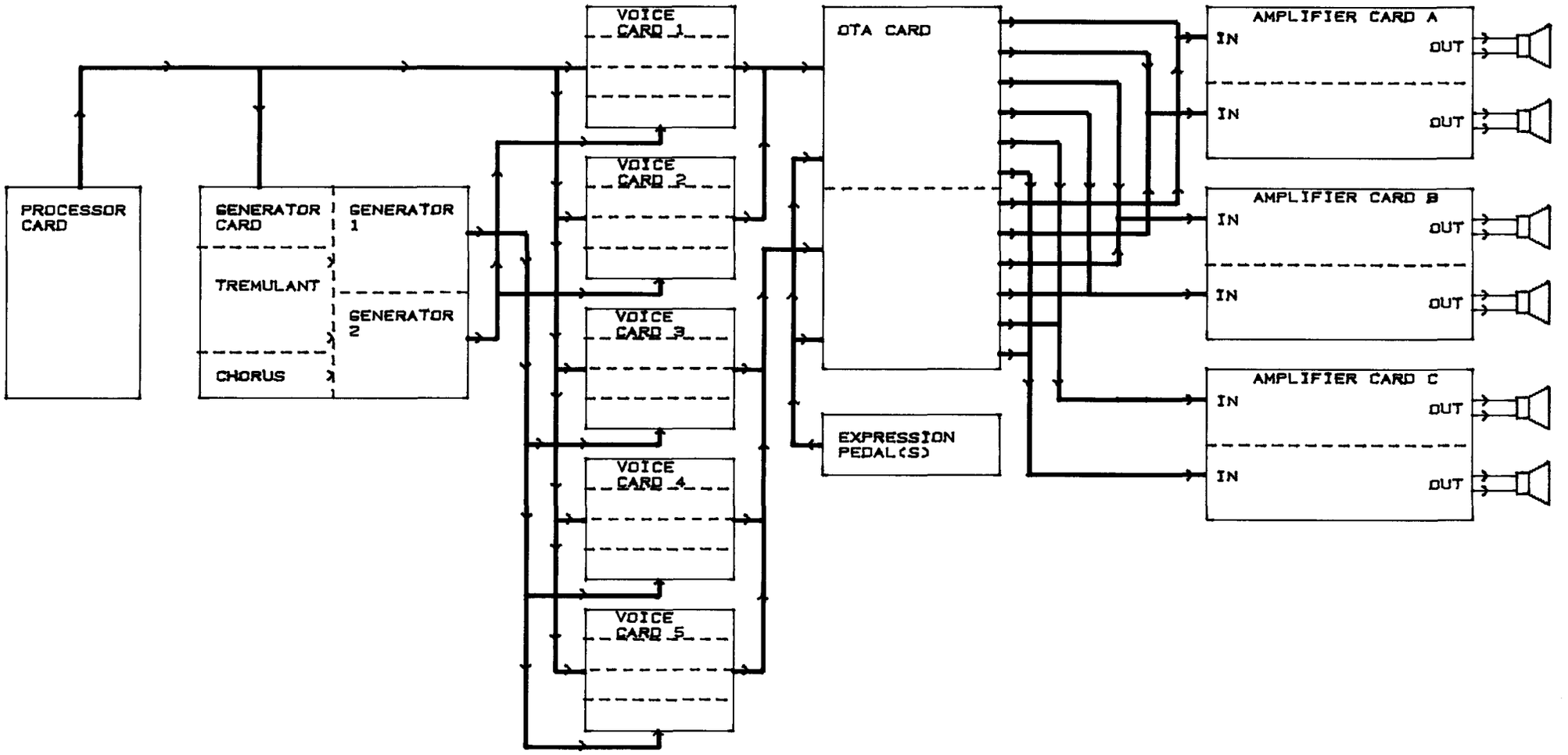

BLOCK DIAGRAM (1 RACK)			
DESIGN	LAB		REV.
DRAWN	VERSCHOOR	11-06-91	
JOHANNUS 300-SERIES			PAGE 16

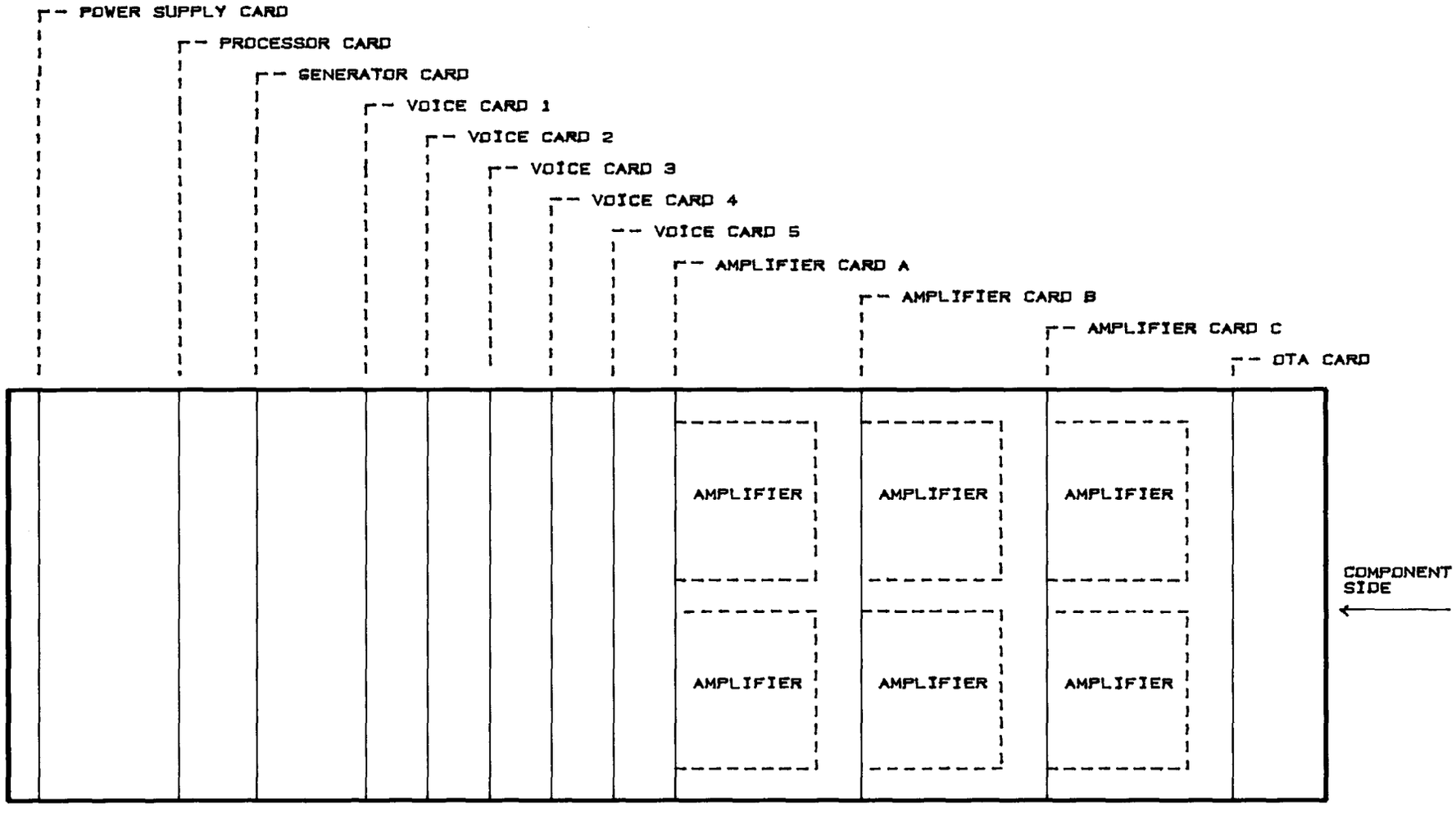

POSITION DIAGRAM CARDS (TOPVIEW)			
DESIGN	LAB		REV.
DRAWN	VERSCHOOR	11-06-91	
JOHANNUS 300-SERIES			PAGE 17

CON1 — POWER SUPPLY CARD

+12V	5	+12V
-12V	6	-12V
AGND	7	AGND
AGND	8	AGND
+35V	9	+35V
-35V	10	-35V
LGND	17	LGND
LGND	18	LGND
+5V	25	+5V
LGND	26	LGND
LGND	27	LGND

CON2 — PROCESSOR CARD

+12V	5	+12V
-12V	6	-12V
AGND	7	AGND
AGND	8	AGND
+35V	9	+35V
-35V	10	-35V
LGND	17	LGND
LGND	18	LGND
RES M114	20	EPROM CHOISE
B6	21	DATA STROBE
B4	22	B5
B2	23	B3
B0	24	B1
+5V	25	+5V
LGND	26	LGND
LGND	27	LGND
SEL7	29	SEL6
SEL5	30	SEL4
SEL3	31	SEL2
SEL1	32	SEL0

CON3 — GENERATOR CARD

+12V	5	+12V
-12V	6	-12V
AGND	7	AGND
AGND	8	AGND
+35V	9	+35V
-35V	10	-35V
GEN1	16	GEN1
LGND	17	LGND
LGND	18	LGND
GEN2	19	GEN2
RES M114	20	EPROM CHOISE
B6	21	DATA STROBE
B4	22	B5
B2	23	B3
B0	24	B1
+5V	25	+5V
LGND	26	LGND
LGND	27	LGND
SEL7	29	SEL6
SEL5	30	SEL4
SEL3	31	SEL2
SEL1	32	SEL0

CON4-5 — VOICE CARD 1-2

PRE-AMP1B	1	PRE-AMP2B
PRE-AMP3B	2	PRE-AMP4B
PRE-AMP5B	3	PRE-AMP6B
+12V	5	+12V
-12V	6	-12V
AGND	7	AGND
AGND	8	AGND
+35V	9	+35V
-35V	10	-35V
GEN1	16	GEN1
LGND	17	LGND
LGND	18	LGND
GEN2	19	GEN2
RES M114	20	EPROM CHOISE
B6	21	DATA STROBE
B4	22	B5
B2	23	B3
B0	24	B1
+5V	25	+5V
LGND	26	LGND
LGND	27	LGND
SEL7	29	SEL6
SEL5	30	SEL4
SEL3	31	SEL2
SEL1	32	SEL0

CON6-8 — VOICE CARD 3-5

PRE-AMP1A	1	PRE-AMP2A
PRE-AMP3A	2	PRE-AMP4A
PRE-AMP5A	3	PRE-AMP6A
+12V	5	+12V
-12V	6	-12V
AGND	7	AGND
AGND	8	AGND
+35V	9	+35V
-35V	10	-35V
GEN1	16	GEN1
LGND	17	LGND
LGND	18	LGND
GEN2	19	GEN2
RES M114	20	EPROM CHOISE
B6	21	DATA STROBE
B4	22	B5
B2	23	B3
B0	24	B1
+5V	25	+5V
LGND	26	LGND
LGND	27	LGND
SEL7	29	SEL6
SEL5	30	SEL4
SEL3	31	SEL2
SEL1	32	SEL0

CON9-11 — AMPLIFIER CARDS

POWER-AMP1	1	POWER-AMP2
POWER-AMP3	2	POWER-AMP4
TO ECHO	3	FROM ECHO B
	4	FROM ECHO A
+12V	5	+12V
-12V	6	-12V
AGND	7	AGND
AGND	8	AGND
+35V	9	+35V
-35V	10	-35V
VOLUME	11	MUTE
PHONES	12	
LGND	17	LGND
LGND	18	LGND
+5V	25	+5V
LGND	26	LGND
LGND	27	LGND

CON12 — DTA CARD

POWER-AMP1	1	POWER-AMP2
POWER-AMP3	2	POWER-AMP4
POWER-AMP5	3	POWER-AMP6
FROM ECHO A	4	FROM ECHO B
+12V	5	+12V
-12V	6	-12V
AGND	7	AGND
AGND	8	AGND
+35V	9	+35V
-35V	10	-35V
VOLUME	11	MUTE
PHONES	12	TO ECHO
PRE-AMP5A	13	PRE-AMP5A
PRE-AMP6A	14	PRE-AMP6A
PRE-AMP3A	15	PRE-AMP3A
PRE-AMP4A	16	PRE-AMP4A
PRE-AMP1A	17	PRE-AMP1A
PRE-AMP2A	18	PRE-AMP2A
PRE-AMP5B	19	PRE-AMP5B
PRE-AMP6B	20	PRE-AMP6B
PRE-AMP3B	21	PRE-AMP3B
PRE-AMP4B	22	PRE-AMP4B
PRE-AMP1B	23	PRE-AMP1B
PRE-AMP1A	24	PRE-AMP1A
+5V	25	+5V
LGND	26	LGND
LGND	27	LGND

PINNING BUS CARD CONNECTORS (RACKS)

DESIGN	LAB		REV.
DRAWN	VERSCHOOR	11-06-91	
JOHANNUS 300-SERIES			PAGE 18

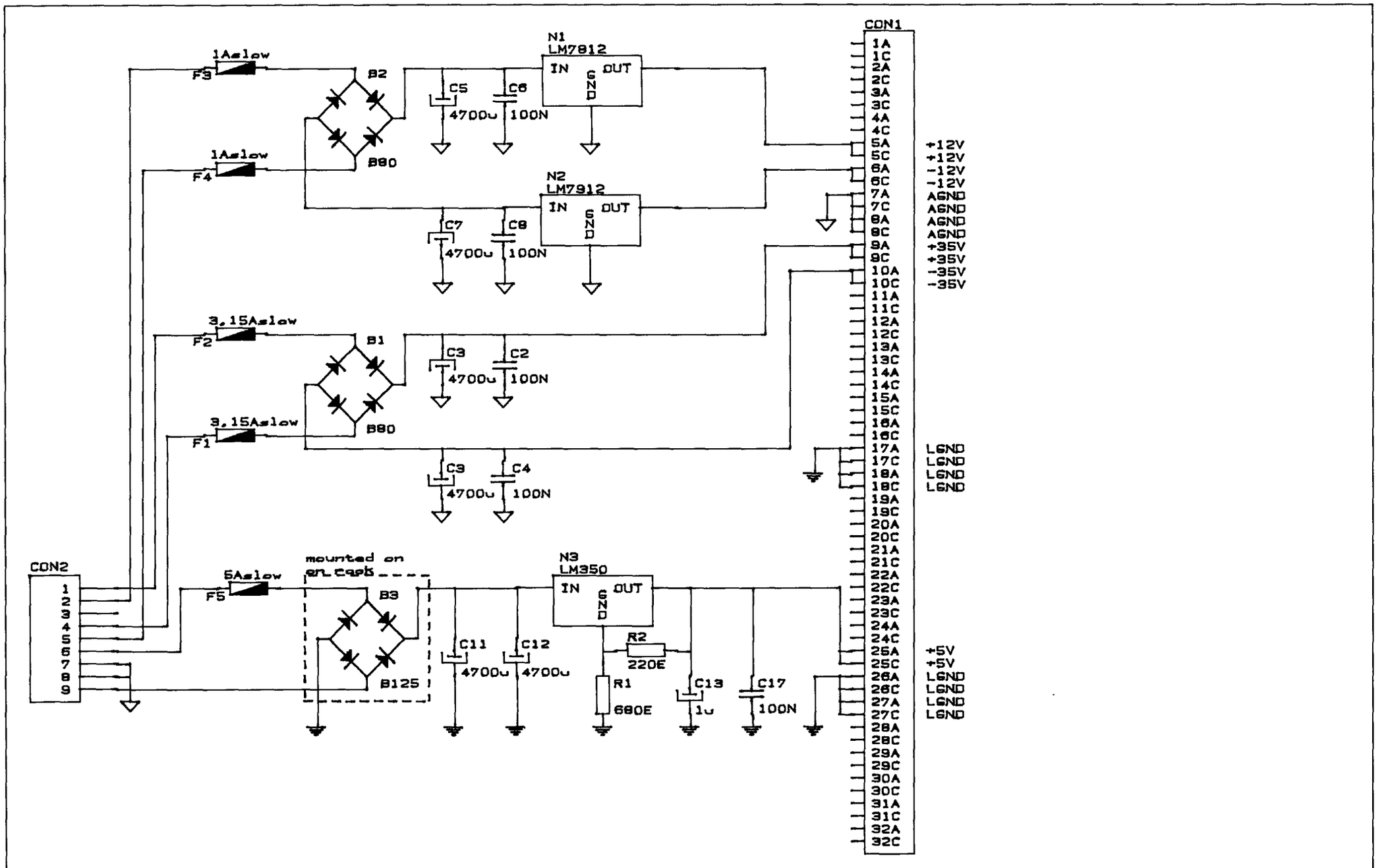

POWER SUPPLY (power supply card rack)

DESIGN	LAB		REV.
DRAWN	VERSCHOOR	12-06-91	

JOHANNUS 300-SERIES

PAGE 19

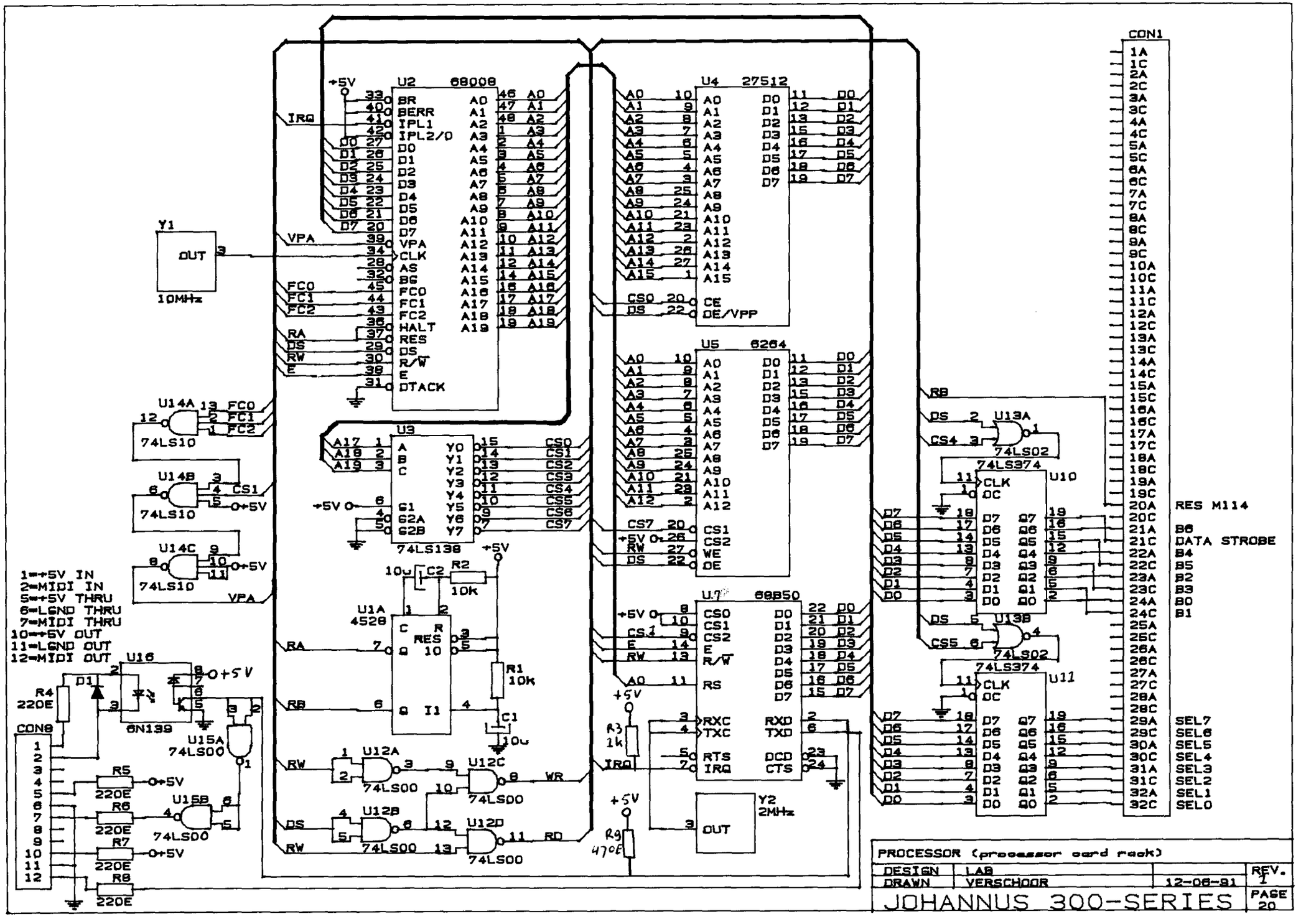
U2 68000
U4 27512
U5 6264
U7 68B50
U3 74LS138
U1A 4528
Y1 10MHz
Y2 2MHz
CON1
CON8
U10 74LS374
U11 74LS374
U13A 74LS02
U13B 74LS02
U14A 74LS10
U14B 74LS10
U14C 74LS10
U15A 74LS00
U15B 74LS00
U16 6N139
U12A 74LS00
U12B 74LS00
U12C 74LS00
U12D 74LS00
RES M114
B6
DATA STROBE
B4
B5
B2
B3
B0
B1
SEL7
SEL6
SEL5
SEL4
SEL3
SEL2
SEL1
SEL0
1=+5V IN
2=MIDI IN
5=+5V THRU
6=LGND THRU
7=MIDI THRU
10=+5V OUT
11=LGND OUT
12=MIDI OUT
PROCESSOR (processor card rack)
DESIGN LAB
DRAWN VERSCHOOR 12-08-91
REV. 1
JOHANNUS 300-SERIES
PAGE 20

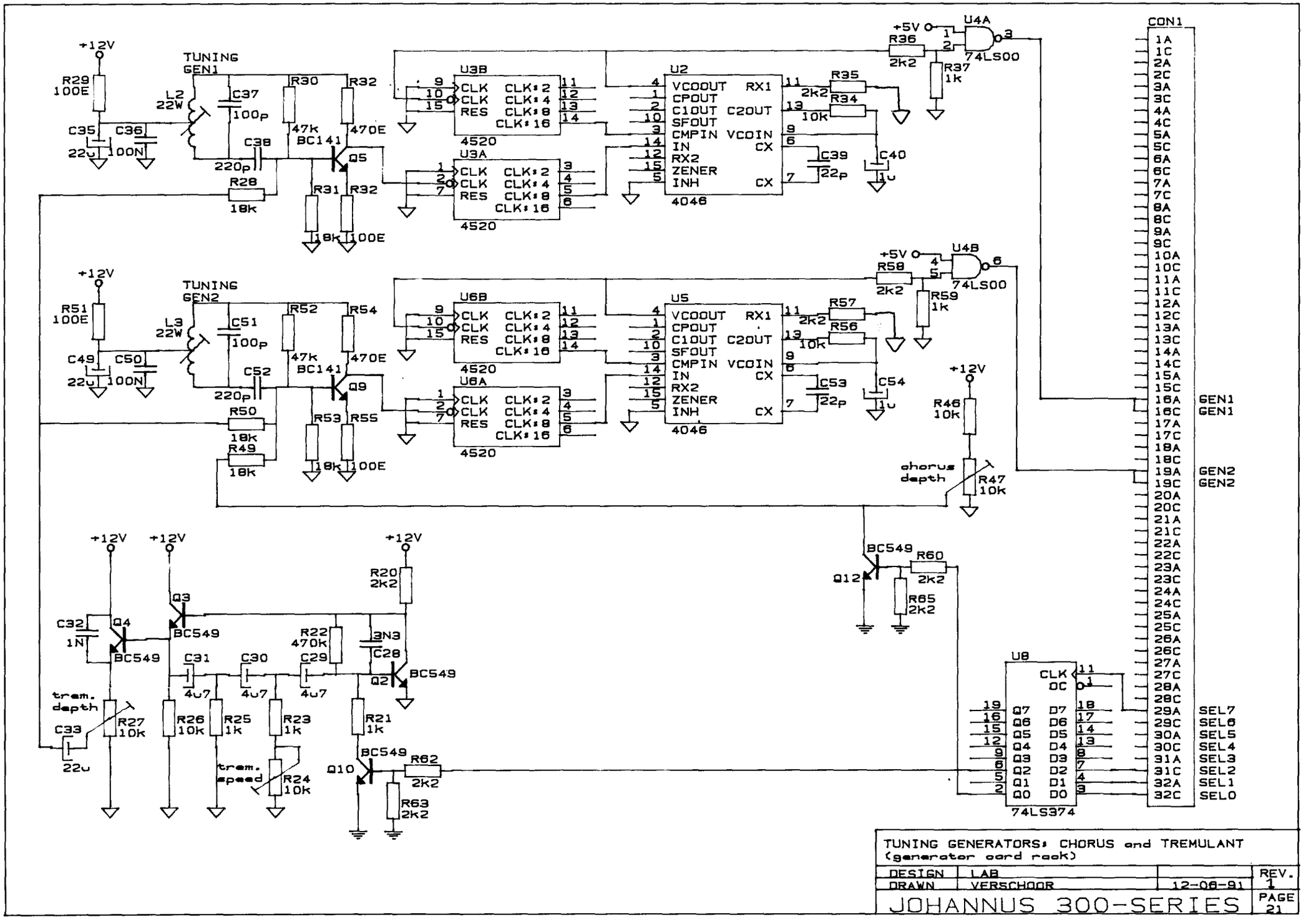
TUNING GENERATORS: CHORUS and TREMULANT
(generator card rack)
DESIGN LAB
DRAWN VERSCHOOR 12-08-91
REV. 1
JOHANNUS 300-SERIES
PAGE 21
TUNING GEN1
TUNING GEN2
U3B
U3A
U6B
U6A
4520
U2
U5
4046
U4A
U4B
74LS00
U8
74LS374
CON1
GEN1
GEN2
SEL7
SEL6
SEL5
SEL4
SEL3
SEL2
SEL1
SEL0
chorus depth
trem. depth
trem. speed
+12V
+5V

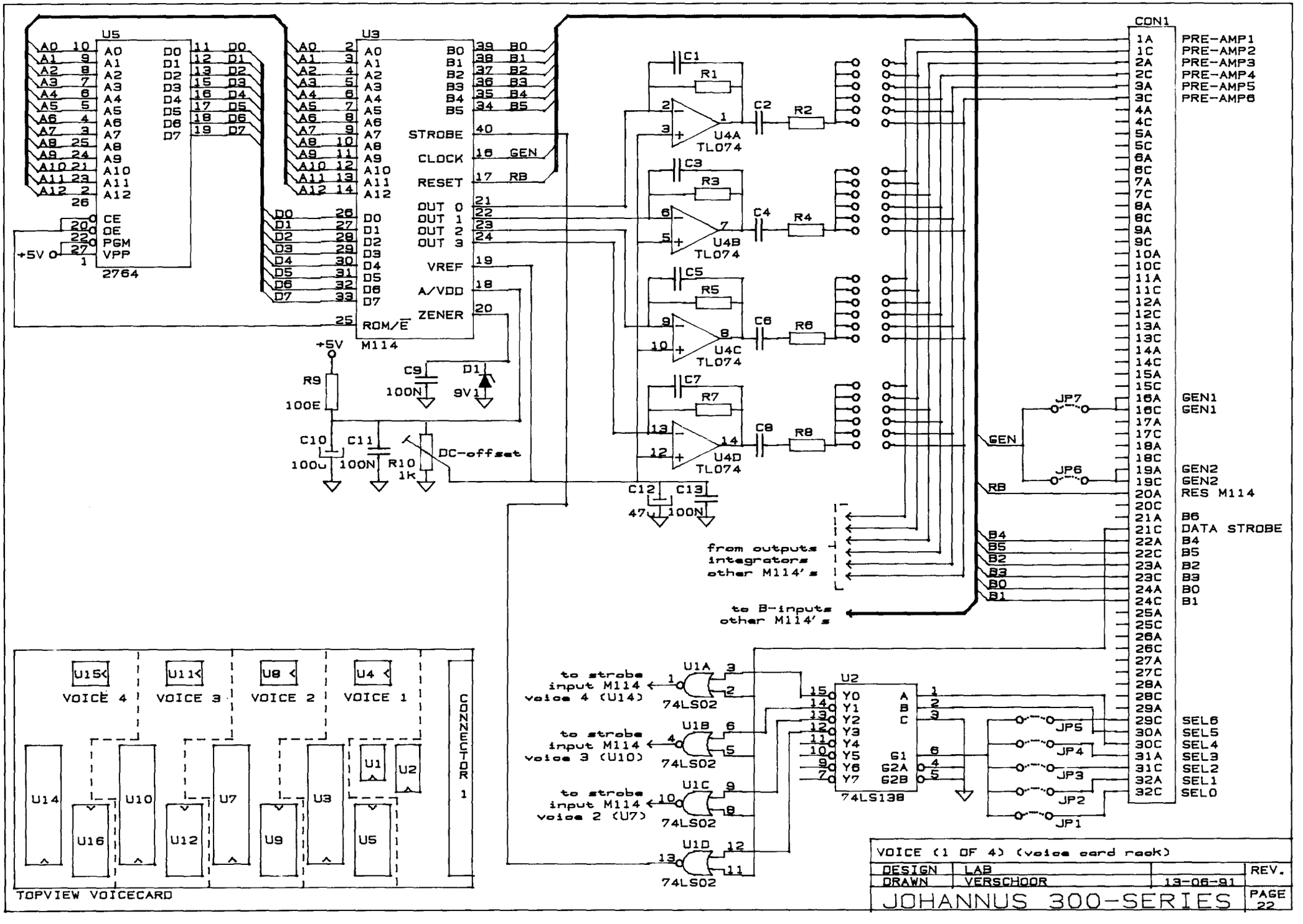
U5
2764
U3
M114
STROBE
CLOCK
RESET
OUT 0
OUT 1
OUT 2
OUT 3
VREF
A/VDD
ZENER
ROM/E
+5V
R9
100E
C9
100N
D1
9V1
C10
100u
C11
100N
R10
1K
DC-offset
C1
R1
U4A
TL074
C2
R2
C3
R3
U4B
TL074
C4
R4
C5
R5
U4C
TL074
C6
R6
C7
R7
U4D
TL074
C8
R8
C12
47u
C13
100N
CON1
PRE-AMP1
PRE-AMP2
PRE-AMP3
PRE-AMP4
PRE-AMP5
PRE-AMP6
GEN1
GEN1
GEN2
GEN2
RES M114
B6
DATA STROBE
B4
B5
B2
B3
B0
B1
SEL6
SEL5
SEL4
SEL3
SEL2
SEL1
SEL0
JP7
JP6
JP5
JP4
JP3
JP2
JP1
GEN
RB
from outputs integrators other M114's
to B-inputs other M114's
U1A
74LS02
U1B
74LS02
U1C
74LS02
U1D
74LS02
to strobe input M114 voice 4 (U14)
to strobe input M114 voice 3 (U10)
to strobe input M114 voice 2 (U7)
U2
74LS138
U15
U11
U8
U4
VOICE 4
VOICE 3
VOICE 2
VOICE 1
U14
U16
U10
U12
U7
U9
U3
U5
U1
U2
CONNECTOR 1
TOPVIEW VOICECARD
VOICE (1 OF 4) (voice card rack)
DESIGN LAB
DRAWN VERSCHOOR 13-06-91
REV.
JOHANNUS 300-SERIES
PAGE 22

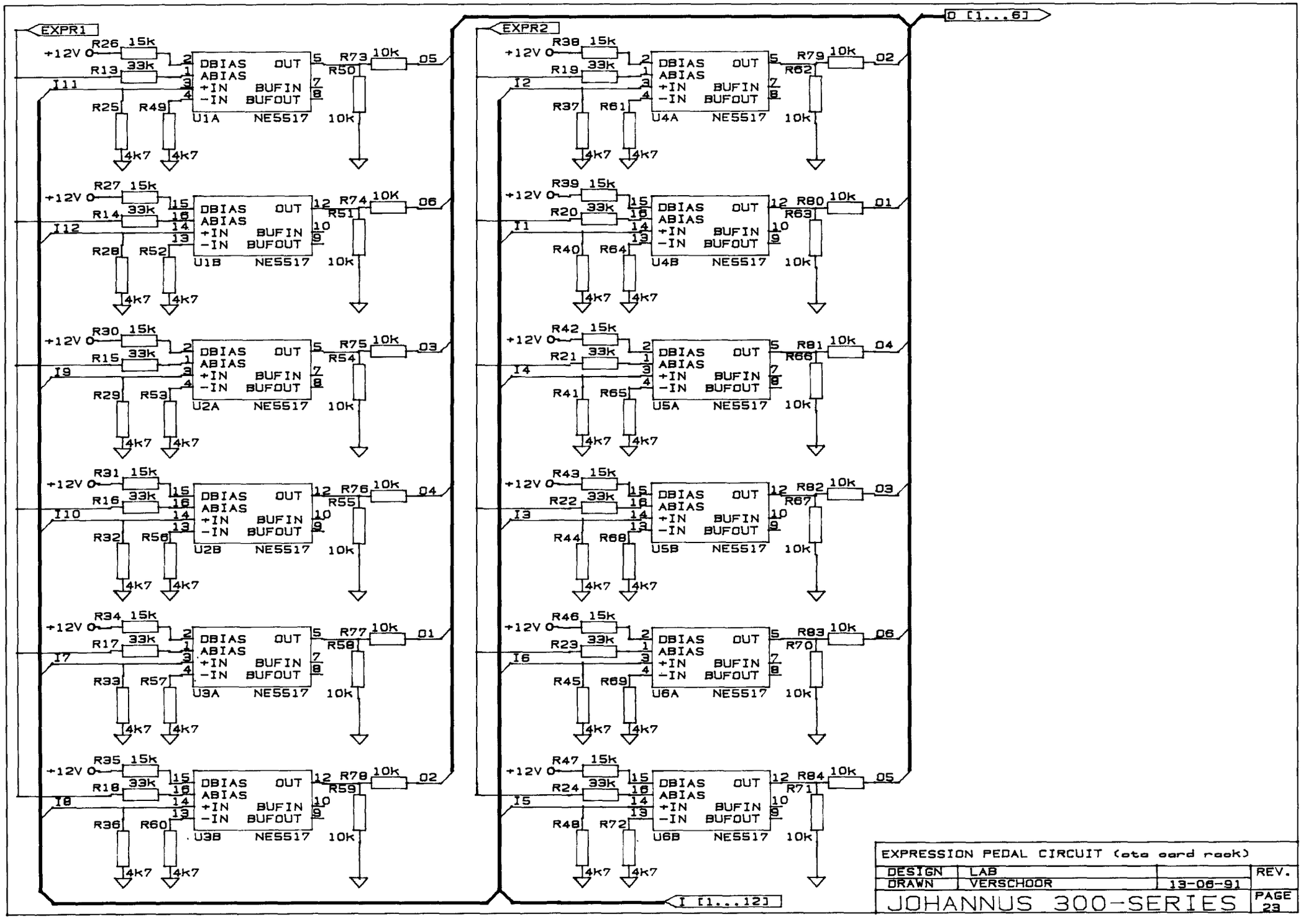

EXPRESSION PEDAL CIRCUIT (ata card rack)			
DESIGN	LAB		REV.
DRAWN	VERSCHOOR	13-08-91	
JOHANNUS 300-SERIES			PAGE 23

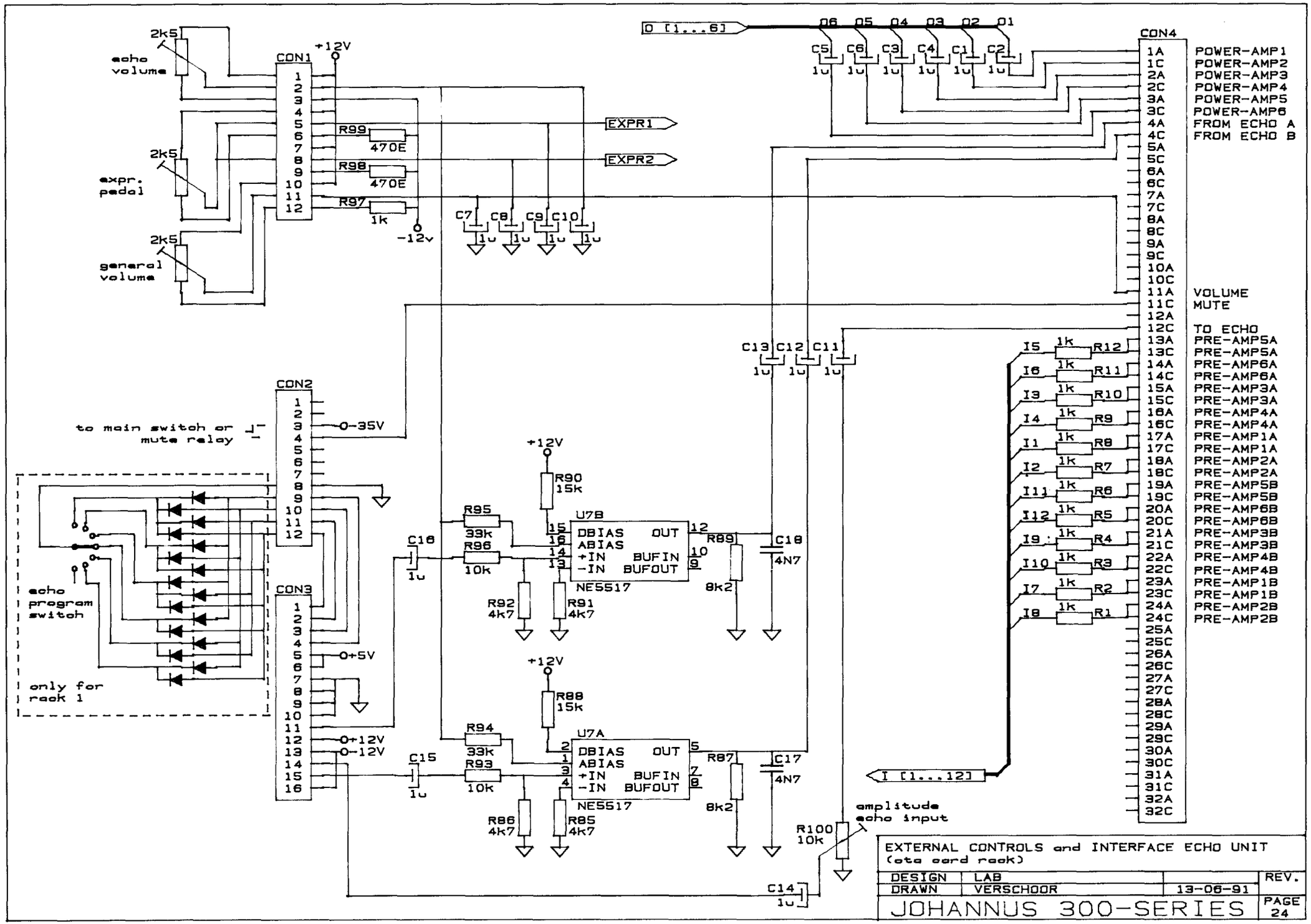
echo volume
2k5
expr. pedal
general volume
CON1
+12V
-12v
R99 470E
R98 470E
R97 1k
EXPR1
EXPR2
C7 C8 C9 C10 1u
O [1...6]
O6 O5 O4 O3 O2 O1
C5 C6 C3 C4 C1 C2 1u
CON4
POWER-AMP1
POWER-AMP2
POWER-AMP3
POWER-AMP4
POWER-AMP5
POWER-AMP6
FROM ECHO A
FROM ECHO B
VOLUME
MUTE
TO ECHO
PRE-AMP5A
PRE-AMP5A
PRE-AMP6A
PRE-AMP6A
PRE-AMP3A
PRE-AMP3A
PRE-AMP4A
PRE-AMP4A
PRE-AMP1A
PRE-AMP1A
PRE-AMP2A
PRE-AMP2A
PRE-AMP5B
PRE-AMP5B
PRE-AMP6B
PRE-AMP6B
PRE-AMP3B
PRE-AMP3B
PRE-AMP4B
PRE-AMP4B
PRE-AMP1B
PRE-AMP1B
PRE-AMP2B
PRE-AMP2B
C13 C12 C11 1u
I5 I6 I3 I4 I1 I2 I11 I12 I9 I10 I7 I8
R12 R11 R10 R9 R8 R7 R6 R5 R4 R3 R2 R1 1k
CON2
to main switch or mute relay
0-35V
CON3
echo program switch
only for rack 1
0+5V
0+12V
0-12V
+12V
R90 15k
R88 15k
R95 33k
R96 10k
R94 33k
R93 10k
C16 1u
C15 1u
U7B
U7A
DBIAS
ABIAS
+IN
-IN
OUT
BUFIN
BUFOUT
NE5517
R89 8k2
R87 8k2
C18 4N7
C17 4N7
R92 4k7
R91 4k7
R86 4k7
R85 4k7
I [1...12]
amplitude echo input
R100 10k
C14 1u
EXTERNAL CONTROLS and INTERFACE ECHO UNIT
(ota card rack)
DESIGN LAB
DRAWN VERSCHOOR 13-06-91
REV.
JOHANNUS 300-SERIES
PAGE 24

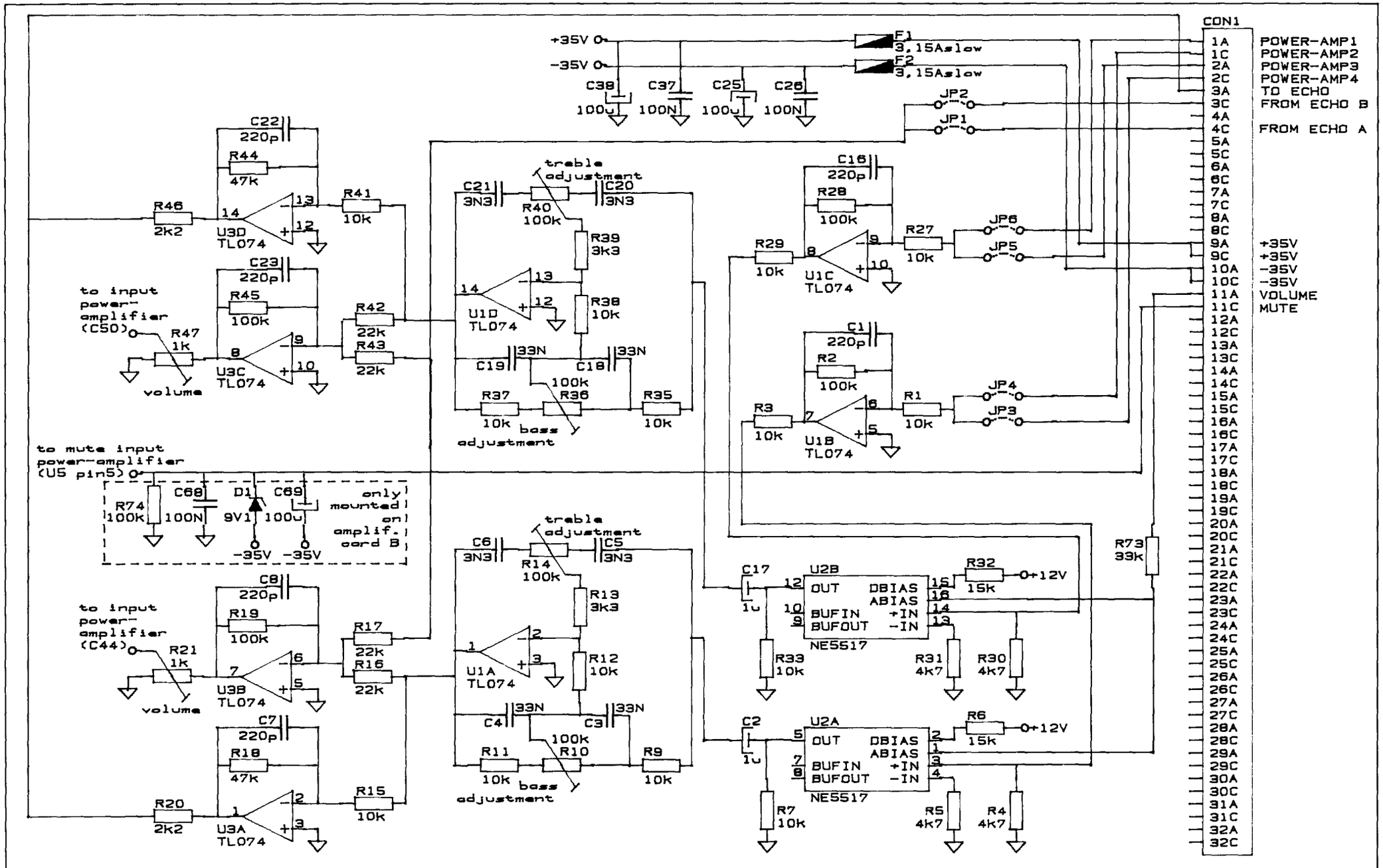

PRE-AMPLIFIERS and TONE CONTROLS
(amplifier card rack)

DESIGN	LAB		REV.
DRAWN	VERSCHOOR	14-08-91	

JOHANNUS 300-SERIES

PAGE 25

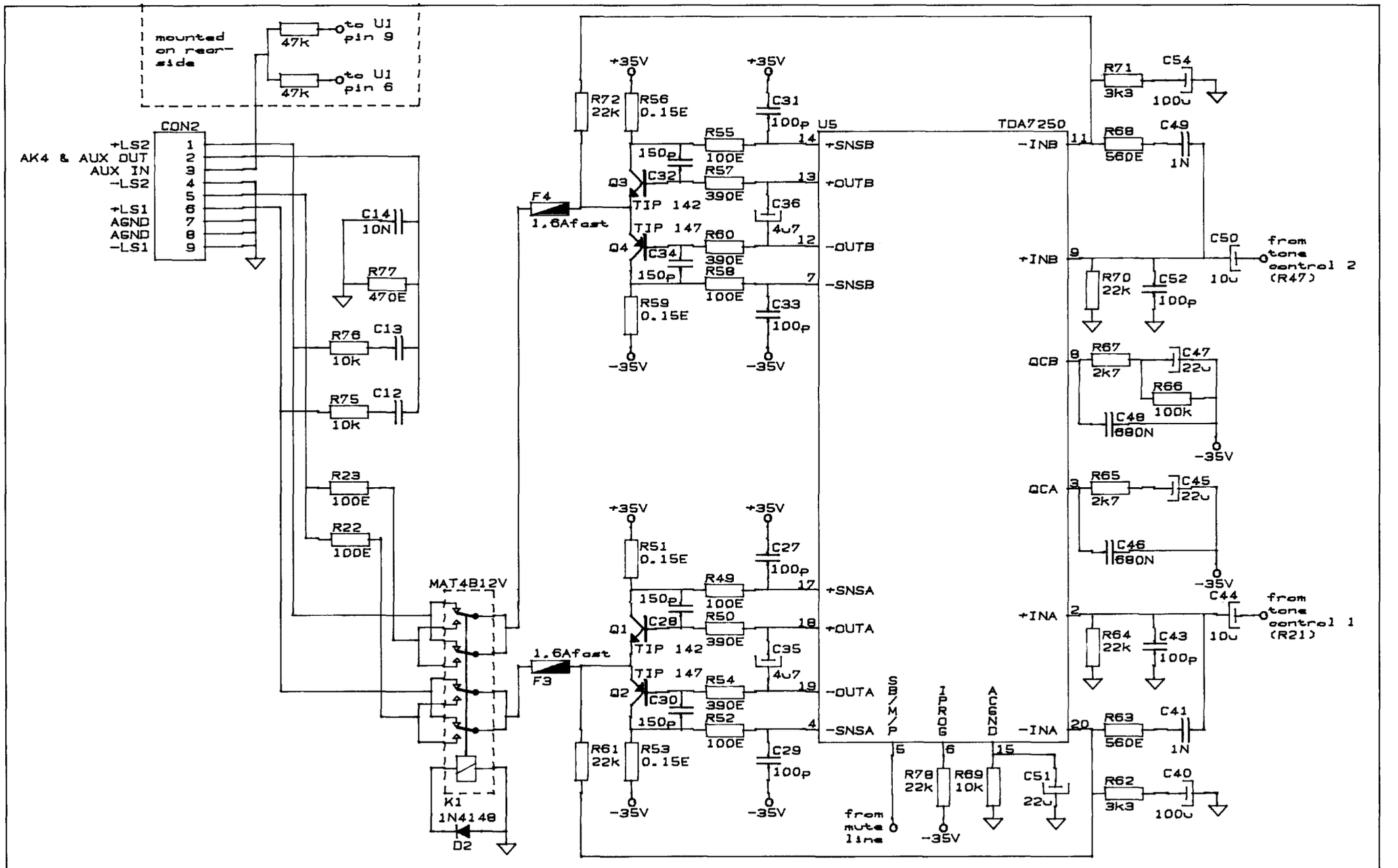

POWER AMPLIFIER (amplifier card A & B rack)			
DESIGN	LAB		REV.
DRAWN	VERSCHOOR	17-06-91	
JOHANNUS 300-SERIES			PAGE 26

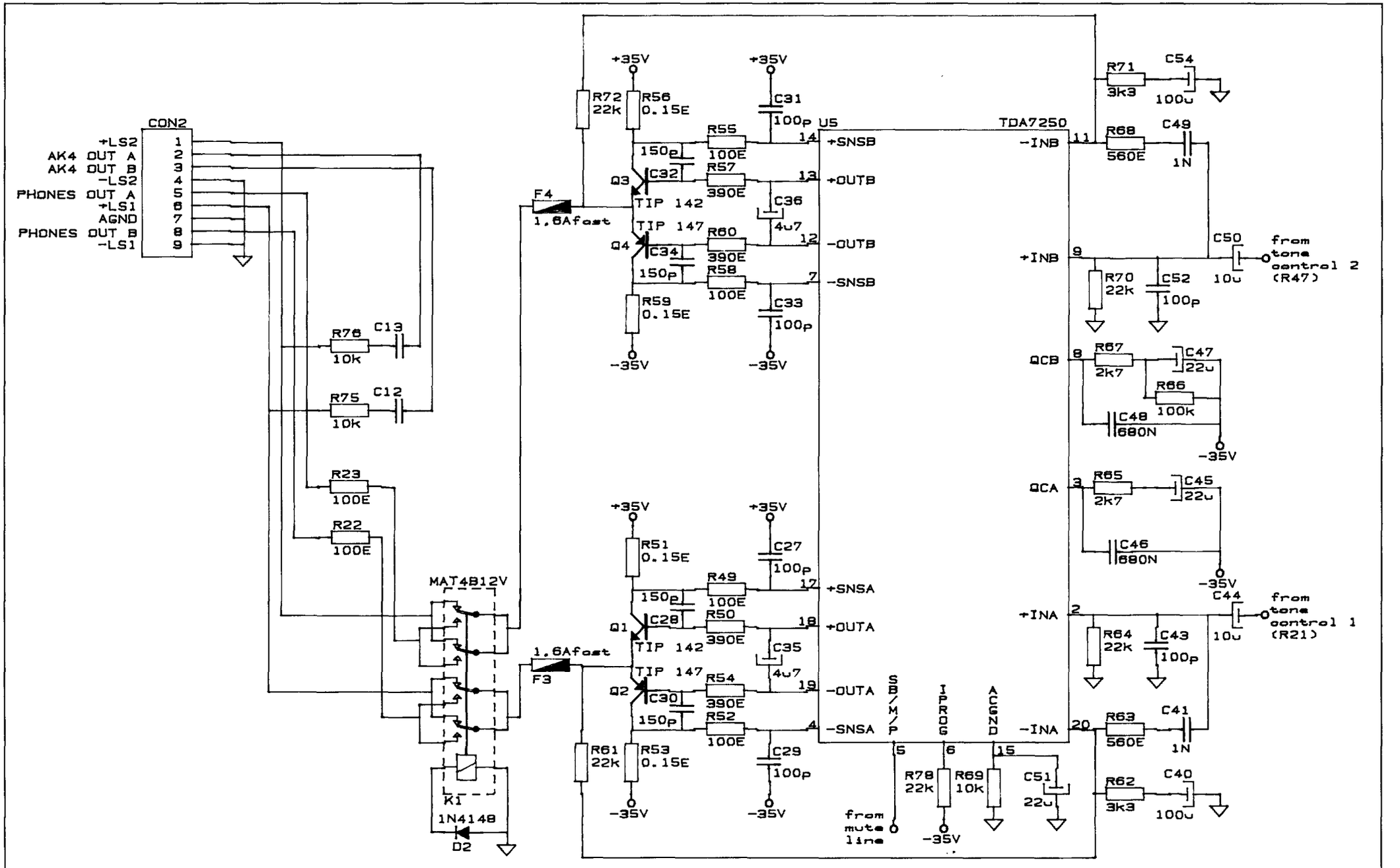

POWER AMPLIFIER (amplifier card C rack)			
DESIGN	LAB		REV.
DRAWN	VERSCHOOR	17-06-91	
JOHANNUS 300-SERIES			PAGE 27

1. NOT CONNECTED
2. NOT CONNECTED
3. NOT CONNECTED
4. +5V MIDI IN
5. MIDI IN

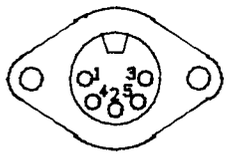

MIDI
IN

1. NOT CONNECTED
2. NOT CONNECTED
3. NOT CONNECTED
4. +5V MIDI THRU
5. MIDI THRU

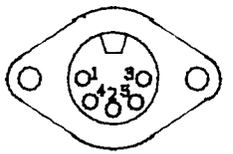

MIDI
THRU

1. NOT CONNECTED
2. NOT CONNECTED
3. NOT CONNECTED
4. +5V MIDI OUT
5. MIDI OUT

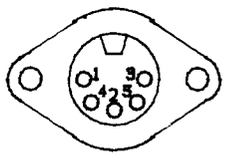

MIDI
OUT

1. AK-4 OUT CHANNEL A
2. GROUND
3. NOT CONNECTED
4. AK-4 OUT CHANNEL B
5. NOT CONNECTED

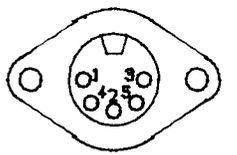

AK-4
OUT

1. AUX OUT CHANNEL A
2. GROUND
3. AUX IN CHANNEL A
4. AUX OUT CHANNEL B
5. AUX IN CHANNEL B

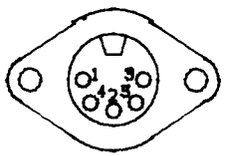

AUX
IN/OUT

EXTERNAL CONNECTIONS (mounted on the rearside of the organ) SOLDERINGSIDEVIEW

DESIGN	LAB		REV.
DRAWN	VERSCHOOR	18-06-91	
JOHANNUS 300-SERIES			PAGE 28

1. NOT CONNECTED
2. NOT CONNECTED
3. NOT CONNECTED
4. +5V MIDI IN
5. MIDI IN

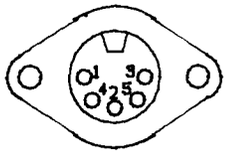

MIDI IN

1. NOT CONNECTED
2. NOT CONNECTED
3. NOT CONNECTED
4. +5V MIDI THRU
5. MIDI THRU

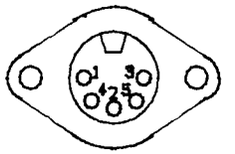

MIDI THRU

1. NOT CONNECTED
2. NOT CONNECTED
3. NOT CONNECTED
4. +5V MIDI OUT
5. MIDI OUT

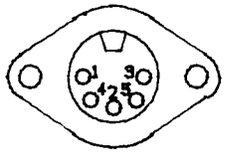

MIDI OUT

1. AK-4 OUT CHANNEL A
2. GROUND
3. NOT CONNECTED
4. AK-4 OUT CHANNEL B
5. NOT CONNECTED

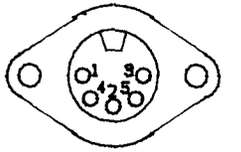

AK-4 OUT

1. AUX OUT CHANNEL A
2. GROUND
3. AUX IN CHANNEL A
4. AUX OUT CHANNEL B
5. AUX IN CHANNEL B

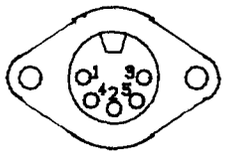

AUX IN/OUT

335

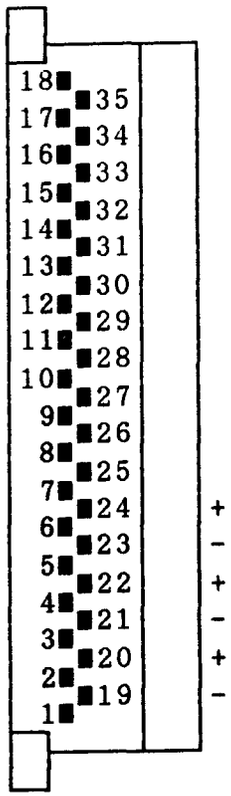

+	BASS	SW
-	BASS	SW
+	TREBLE II	GR
-	TREBLE II	GR
+	TREBLE I	GR
-	TREBLE I	GR
+	MIDDLE	GR
-	MIDDLE	GR
+	BASS	GR
-	BASS	GR
+	TREBLE II	PD
-	TREBLE II	PD
+	TREBLE I	PD
-	TREBLE I	PD
+	MIDDLE	PD
-	MIDDLE	PD
+	BASS	PD
-	BASS	PD

+	TREBLE II	SW
-	TREBLE II	SW
+	TREBLE I	SW
-	TREBLE I	SW
+	MIDDLE	SW
-	MIDDLE	SW

EXTERNAL CONNECTIONS (mounted on the rearside of the organ) SOLDERINGSIDEVIEW

DESIGN	LAB		REV.
DRAWN	VERSCHOOR	18-06-91	
JOHANNUS 300-SERIES			PAGE 28

1. NOT CONNECTED
2. NOT CONNECTED
3. NOT CONNECTED
4. +5V MIDI IN
5. MIDI IN

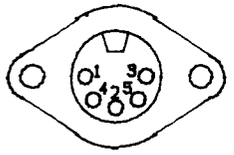

MIDI IN

1. NOT CONNECTED
2. NOT CONNECTED
3. NOT CONNECTED
4. +5V MIDI THRU
5. MIDI THRU

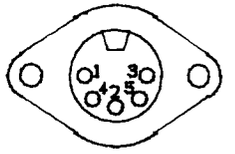

MIDI THRU

1. NOT CONNECTED
2. NOT CONNECTED
3. NOT CONNECTED
4. +5V MIDI OUT
5. MIDI OUT

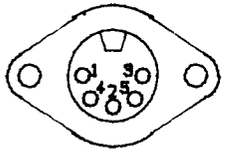

MIDI OUT

1. AK-4 OUT CHANNEL A
2. GROUND
3. NOT CONNECTED
4. AK-4 OUT CHANNEL B
5. NOT CONNECTED

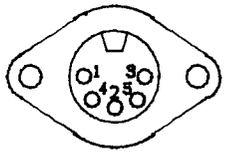

AK-4 OUT

1. AUX OUT CHANNEL A
2. GROUND
3. AUX IN CHANNEL A
4. AUX OUT CHANNEL B
5. AUX IN CHANNEL B

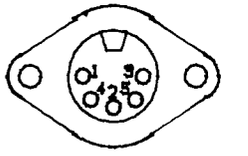

AUX IN/OUT

355

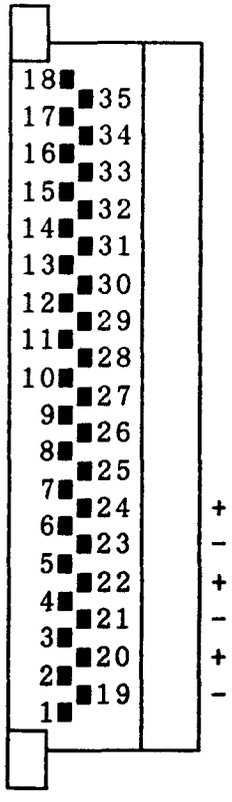

+	BASS	SW
-	BASS	SW
+	TREBLE II	GR
-	TREBLE II	GR
+	TREBLE I	GR
-	TREBLE I	GR
+	MIDDLE	GR
-	MIDDLE	GR
+	BASS	GR
-	BASS	GR
+	TREBLE II	PD/CH
-	TREBLE II	PD/CH
+	TREBLE I	PD/CH
-	TREBLE I	PD/CH
+	MIDDLE	PD/CH
-	MIDDLE	PD/CH
+	BASS	PD/CH
-	BASS	PD/CH

+	TREBLE II	SW
-	TREBLE II	SW
+	TREBLE I	SW
-	TREBLE I	SW
+	MIDDLE	SW
-	MIDDLE	SW

EXTERNAL CONNECTIONS (mounted on the rearside of the organ) SOLDERINGSIDEVIEW

DESIGN	LAB		REV.
DRAWN	VERSCHOOR	18-06-91	
JOHANNUS 300-SERIES			PAGE 28

CONNECTED
CONNECTED
CONNECTED
MIDI IN
IN

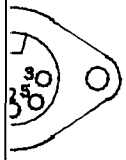

DI
N

1. NOT CONNECTED
2. NOT CONNECTED
3. NOT CONNECTED
4. +5V MIDI THRU
5. MIDI THRU

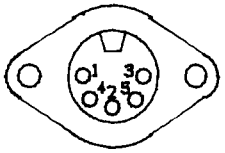

MIDI
THRU

1. NOT CONNECTED
2. NOT CONNECTED
3. NOT CONNECTED
4. +5V MIDI OUT
5. MIDI OUT

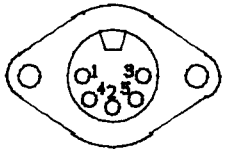

MIDI
OUT

1. AK-4 OUT CHANNEL A
2. GROUND
3. NOT CONNECTED
4. AK-4 OUT CHANNEL B
5. NOT CONNECTED

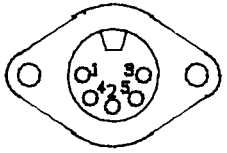

AK-4
OUT

1. AUX OUT CHANNEL A
2. GROUND
3. AUX IN CHANNEL A
4. AUX OUT CHANNEL B
5. AUX IN CHANNEL B

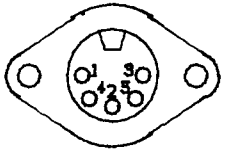

AUX
IN/OUT

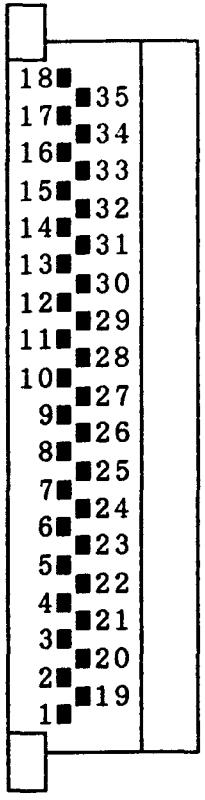

	CH	
	CH	
LE II	GR	
LE II	GR	
LE I	GR	
LE I	GR	
LE	GR	
LE	GR	
	GR	
	GR	
LE II	PD	
LE II	PD	
LE I	PD	
LE I	PD	
LE	PD	
LE	PD	
	PD	
	PD	

+	TREBLE II	SW
-	TREBLE II	SW
+	TREBLE I	SW
-	TREBLE I	SW
+	MIDDLE	SW
-	MIDDLE	SW
+	BASS	SW
-	BASS	SW
+	TREBLE II	CH
-	TREBLE II	CH
+	TREBLE I	CH
-	TREBLE I	CH
+	MIDDLE	CH
-	MIDDLE	CH

EXTERNAL CONNECTIONS (mounted on the rearside of the organ) SOLDERINGSIDEVIEW

DESIGN	LAB		REV.
DRAWN	VERSCHOOR	18-06-91	
JOHANNUS 300-SERIES			PAGE 28

1. NOT CONNECTED
2. NOT CONNECTED
3. NOT CONNECTED
4. +5V MIDI IN
5. MIDI IN

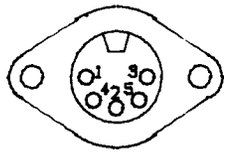

MIDI IN

1. NOT CONNECTED
2. NOT CONNECTED
3. NOT CONNECTED
4. +5V MIDI THRU
5. MIDI THRU

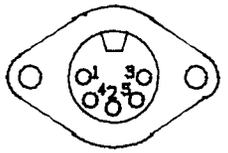

MIDI THRU

1. NOT CONNECTED
2. NOT CONNECTED
3. NOT CONNECTED
4. +5V MIDI OUT
5. MIDI OUT

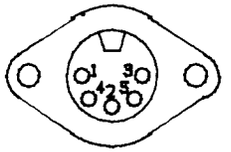

MIDI OUT

1. AK-4 OUT CHANNEL A
2. GROUND
3. NOT CONNECTED
4. AK-4 OUT CHANNEL B
5. NOT CONNECTED

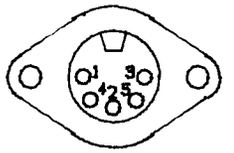

AK-4 OUT

1. AUX OUT CHANNEL A
2. GROUND
3. AUX IN CHANNEL A
4. AUX OUT CHANNEL B
5. AUX IN CHANNEL B

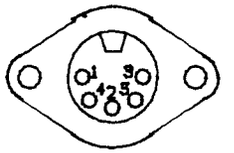

AUX IN/OUT

305 LEFT CON

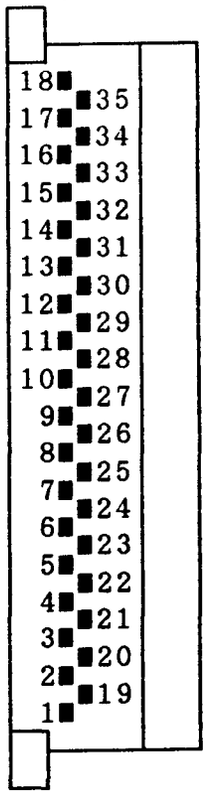

+	BASS	CH
-	BASS	CH
+	TREBLE II	GR
-	TREBLE II	GR
+	TREBLE I	GR
-	TREBLE I	GR
+	MIDDLE	GR
-	MIDDLE	GR
+	BASS	GR
-	BASS	GR
+	TREBLE II	PD
-	TREBLE II	PD
+	TREBLE I	PD
-	TREBLE I	PD
+	MIDDLE	PD
-	MIDDLE	PD
+	BASS	PD
-	BASS	PD

+	TREBLE II	SW
-	TREBLE II	SW
+	TREBLE I	SW
-	TREBLE I	SW
+	MIDDLE	SW
-	MIDDLE	SW
+	BASS	SW
-	BASS	SW
+	TREBLE II	CH
-	TREBLE II	CH
+	TREBLE I	CH
-	TREBLE I	CH
+	MIDDLE	CH
-	MIDDLE	CH

+	REED II	GR
-	REED II	SL
+	REED I	SL
-	REED I	SL
+	TREBLE II	SL
-	TREBLE II	SL
+	TREBLE I	SL
-	TREBLE I	SL
+	MIDDLE	SL
-	MIDDLE	SL
+	BASS	SL
-	BASS	SL

305 RIGHT CON

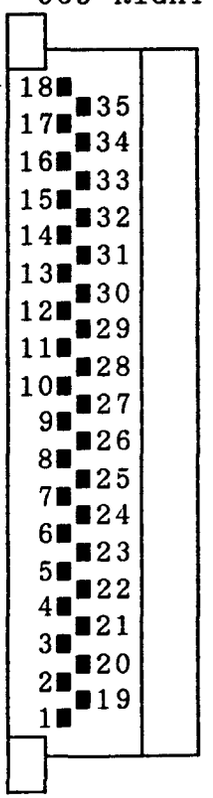

EXTERNAL CONNECTIONS (mounted on the rearside of the organ) SOLDERINGSIDEVIEW

DESIGN	LAB		REV.
DRAWN	VERSCHOOR	18-06-91	
JOHANNUS 300-SERIES			PAGE 28

VOICES OPUS 325D

VOICE NAME		VOICECARD/ VOICENUMBER	AMPLIFIER	OCTALSOCKET PINS/COLOURS
PEDAL		RACK 1		
DOUBLE BASS	16'	CARD1/VOICE2	BASS III	C3&4/RED&VIOLET
SUBBASS	16'	CARD1/VOICE4	BASS II	C1&2/RED&BLUE
OCTAVE	8'	CARD1/VOICE3	BASS II	C1&2/RED&BLUE
VIOLON	8'	CARD1/VOICE1	MIDDLE	A3&4/BLACK&VIOLET
GEDACKT	8'	CARD1/VOICE4	BASS II	C1&2/RED&BLUE
CHORALBASS	4'	CARD2/VOICE2	BASS I	A1&2/BLACK&BLUE
MIXTURE	III	CARD1/VOICE1	TREBLE I	A5&6/BLACK&GREY
BOMBARDE	32'	CARD2/VOICE1	BASS III	C3&4/RED&VIOLET
CONTRA TRUMPET	16'	CARD2/VOICE2	BASS II	C1&2/RED&BLUE
TRUMPET	8'	CARD2/VOICE1	TREBLE II	A7&8/BLACK&WHITE
CLARION	4'	CARD1/VOICE3	TREBLE I	A5&6/BLACK&GREY
GREAT		RACK 1		
BOURDON	16'	CARD2/VOICE3	BASS I	A1&2/BLACK&BLUE
DIAPASON	8'	CARD2/VOICE4	BASS I	A1&2/BLACK&BLUE
GAMBA	8'	CARD4/VOICE3	TREBLE II	A7&8/BLACK&WHITE
RÖHRFLUTE	8'	CARD4/VOICE2	MIDDLE	A3&4/BLACK&VIOLET
OCTAVE	4'	CARD4/VOICE1	MIDDLE	A3&4/BLACK&VIOLET
OPEN FLUTE	4'	CARD4/VOICE4	TREBLE I	A5&6/BLACK&GREY
TWELFTH	2 2/3'	CARD3/VOICE4	BASS I	A1&2/BLACK&BLUE
SUPEROCTAVE	2'	CARD5/VOICE4	TREBLE I	A5&6/BLACK&GREY
CONICAL FLUTE	2'	CARD3/VOICE2	TREBLE II	A7&8/BLACK&WHITE
CORNET	IV	CARD3/VOICE2	TREBLE II	A7&8/BLACK&WHITE
MIXTURE	V-VII	CARD5/VOICE2	TREBLE II	A7&8/BLACK&WHITE
SCHARF	III-V	CARD5/VOICE1	TREBLE I	A5&6/BLACK&GREY
CONTRA TRUMPET	16'	CARD5/VOICE3	MIDDLE	A3&4/BLACK&VIOLET
TRUMPET	8'	CARD3/VOICE1	TREBLE I	A5&6/BLACK&GREY
SWELL		RACK 2		
QUINTATON	16'	CARD3/VOICE4	MIDDLE	B3&4/BROWN&VIOLET
OPEN DIAPASON	8'	CARD3/VOICE3	BASS	B1&2/BROWN&BLUE
VIOLA	8'	CARD1/VOICE4	TREBLE I	B5&6/BROWN&GREY
CELESTE	8'	CARD1/VOICE3	BASS	B1&2/BROWN&BLUE
STOPPED FLUTE	8'	CARD1/VOICE2	MIDDLE	B3&4/BROWN&VIOLET
OCTAVE	4'	CARD1/VOICE1	MIDDLE	B3&4/BROWN&VIOLET
RÖHRFLUTE	4'	CARD4/VOICE4	TREBLE I	B5&6/BROWN&GREY
FLUTE TWELFTH	2 2/3'	CARD2/VOICE4	BASS	B1&2/BROWN&BLUE
WALDFLUTE	2'	CARD2/VOICE3	TREBLE II	B7&8/BROWN&WHITE
NAZARD	1 1/3'	CARD4/VOICE2	TREBLE II	B7&8/BROWN&WHITE
SIFFLUTE	1'	CARD4/VOICE1	TREBLE I	B5&6/BROWN&GREY
SESQUIALTER	II	CARD3/VOICE2	TREBLE II	B7&8/BROWN&WHITE
RAUSCHPFEIFE	III-IV	CARD3/VOICE1	TREBLE II	B7&8/BROWN&WHITE
FAGOTTO	16'	CARD2/VOICE2	BASS	B1&2/BROWN&BLUE
CROMORNE	8'	CARD2/VOICE1	MIDDLE	B3&4/BROWN&VIOLET
VOX HUMANA	8'	CARD4/VOICE3	TREBLE I	B5&6/BROWN&GREY

VOICES OPUS 335D

VOICE NAME		VOICECARD/ VOICENUMBER	AMPLIFIER	OCTALSOCKET PINS/COLOURS
PEDAL		RACK 1		
SUBBASS	32'	CARD1/VOICE1	MIDDLE	A3&4/BLACK&VOILET
DOUBLE BASS	16'	CARD1/VOICE2	MIDDLE	A3&4/BLACK&VIOLET
SUBBASS	16'	CARD3/VOICE1	BASS	A1&2/BLACK&BLUE
ECHO BOURDON	16'	CARD1/VOICE3	MIDDLE	A3&4/BLACK&VIOLET
OCTAVE	8'	CARD3/VOICE2	BASS	A1&2/BLACK&BLUE
VIOLON	8'	CARD3/VOICE3	TREBLE I	A5&6/BLACK&GREY
GEDACKT	8'	CARD1/VOICE4	TREBLE I	A5&6/BLACK&GREY
CHORALBASS	4'	CARD2/VOICE1	TREBLE I	A5&6/BLACK&GREY
BASSFLUTE	4'	CARD3/VOICE4	TREBLE II	A7&8/BLACK&WHITE
MIXTURE	III	CARD2/VOICE2	TREBLE II	A7&8/BLACK&WHITE
BOMBARDE	32'	CARD4/VOICE1	BASS	A1&2/BLACK&BLUE
CONTRA TRUMPET	16'	CARD2/VOICE3	MIDDLE	A1&2/BLACK&VIOLET
TRUMPET	8'	CARD2/VOICE4	TREBLE II	A7&8/BLACK&WHITE
CLARION	4'	CARD4/VOICE2	TREBLE I	A5&6/BLACK&GREY
GREAT		RACK 2		
BOURDON	16'	CARD3/VOICE4	BASS	B1&2/BROWN&BLUE
OPEN DIAPASON	8'	CARD3/VOICE2	BASS	B1&2/BROWN&BLUE
DIAPASON	8'	CARD5/VOICE1	MIDDLE	B3&4/BROWN&VIOLET
GAMBA	8'	CARD1/VOICE3	TREBLE I	B5&6/BROWN&GREY
RÖHRFLUTE	8'	CARD1/VOICE2	MIDDLE	B3&4/BROWN&VIOLET
OCTAVE	4'	CARD1/VOICE1	MIDDLE	B3&4/BROWN&VIOLET
SALICIONAL	4'	CARD5/VOICE3	BASS	B1&2/BROWN&BLUE
OPEN FLUTE	4'	CARD3/VOICE2	TREBLE I	B5&6/BROWN&GREY
TWELFTH	2 2/3'	CARD2/VOICE4	BASS	B1&2/BROWN&BLUE
SUPEROCTAVE	2'	CARD4/VOICE4	TREBLE I	B5&6/BROWN&GREY
CONICAL FLUTE	2'	CARD2/VOICE3	TREBLE II	B7&8/BROWN&WHITE
LARIGOT	1 1/3'	CARD5/VOICE2	TREBLE II	B7&8/BROWN&WHITE
CORNET	IV	CARD2/VOICE2	TREBLE II	B7&8/BROWN&WHITE
MIXTURE	V-VII	CARD4/VOICE2	TREBLE II	B7&8/BROWN&WHITE
SCHARF	III-V	CARD4/VOICE1	TREBLE I	B5&6/BROWN&GREY
CONTRA TRUMPET	16'	CARD4/VOICE3	MIDDLE	B3&4/BROWN&VIOLET
TRUMPET	8'	CARD2/VOICE1	TREBLE II	B7&8/BROWN&WHITE
CLARION	4'	CARD5/VOICE4	TREBLE I	B7&8/BROWN&GREY
SWELL		RACK 3		
QUINTATON	16'	CARD3/VOICE4	MIDDLE	C3&4/RED&VIOLET
OPEN DIAPASON	8'	CARD3/VOICE3	BASS	C1&2/RED&BLUE
VIOLA	8'	CARD1/VOICE4	TREBLE I	C5&6/RED&GREY
CELESTE	8'	CARD1/VOICE3	BASS	C1&2/RED&BLUE
FLUTE HARMONIQUE	8'	CARD5/VOICE2	BASS	C1&2/RED&BLUE
STOPPED FLUTE	8'	CARD1/VOICE2	MIDDLE	C3&4/RED&VIOLET
OCTAVE	4'	CARD1/VOICE1	MIDDLE	C3&4/RED&VIOLET
GEMSHORN	4'	CARD5/VOICE1	TREBLE II	C7&8/RED&WHITE
RÖHRFLUTE	4'	CARD4/VOICE4	TREBLE I	C5&6/RED&GREY
FLUTE TWELFTH	2 2/3'	CARD2/VOICE4	BASS	C1&2/RED&BLUE
OCTAVE	2'	CARD5/VOICE3	TREBLE I	C5&6/RED&GREY
WALDFLUTE	2'	CARD2/VOICE3	TREBLE II	C7&8/RED&WHITE
NAZARD	1 1/3'	CARD4/VOICE2	TREBLE II	C7&8/RED&WHITE
OCTAVE	1'	CARD4/VOICE1	TREBLE I	C5&6/RED&GREY
SESQUIALTER	II	CARD3/VOICE2	TREBLE II	C7&8/RED&WHITE
RAUSCHPFEIFE	III-IV	CARD3/VOICE1	TREBLE II	C7&8/RED&WHITE
FAGOTTO	16'	CARD2/VOICE2	BASS	C1&2/RED&BLUE
CROMORNE	8'	CARD2/VOICE1	MIDDLE	C3&4/RED&VIOLET
VOX HUMANA	8'	CARD4/VOICE3	TREBLE I	C5&6/RED&GREY
SCHALMEY	4'	CARD5/VOICE4	TREBLE II	C7&8/RED&WHITE

VOICES OPUS 355D

VOICE NAME		VOICECARD/ VOICENUMBER	AMPLIFIER	OCTALSOCKET PINS/COLOURS
PEDAL		RACK 1		
DOUBLE BASS	16'	CARD2/VOICE2	BASS	A1&2/BLACK&BLUE
SUBBASS	16'	CARD2/VOICE4	BASS	A1&2/BLACK&BLUE
OCTAVE	8'	CARD2/VOICE3	MIDDLE	A3&4/BLACK&VIOLET
VIOLON	8'	CARD2/VOICE1	TREBLE II	A7&8/BLACK&WHITE
GEDACKT	8'	CARD2/VOICE4	TREBLE I	A5&6/BLACK&GREY
CHORALBASS	4'	CARD1/VOICE3	TREBLE II	A7&8/BLACK&WHITE
MIXTURE	III	CARD2/VOICE1	TREBLE I	A5&6/BLACK&GREY
BOMBARDE	32'	CARD1/VOICE2	MIDDLE	A3&4/BLACK&VIOLET
CONTRA TRUMPET	16'	CARD1/VOICE3	BASS	A1&2/BLACK&BLUE
TRUMPET	8'	CARD1/VOICE2	TREBLE I	A5&6/BLACK&GREY
CLARION	4'	CARD2/VIOCE3	TREBLE II	A7&8/BLACK&WHITE
CHOIR		RACK 1		
LIEBLICH GEDECKT	16'	CARD3/VOICE3	TREBLE I	A5&6/BLACK&GREY
BOURDON	8'	CARD3/VOICE4	MIDDLE	A3&4/BLACK&VIOLET
OCTAVE	4'	CARD4/VOICE1	MIDDLE	A3&4/BLACK&VIOLET
NACHTHORN	4'	CARD4/VOICE2	TREBLE I	A5&6/BLACK&GREY
NAZARD	2 2/3'	CARD4/VOICE3	MIDDLE	A3&4/BLACK&VIOLET
OCTAVE	2'	CARD3/VOICE1	TREBLE I	A5&6/BLACK&GREY
FLUTE	2'	CARD4/VOICE4	TREBLE II	A7&8/BLACK&WHITE
TIERCE	1 3/5'	CARD5/VOICE2	TREBLE I	A5&6/BLACK&GREY
SUPERQUINT	1 1/3'	CARD3/VOICE2	TREBLE II	A7&8/BLACK&WHITE
CYMBAL	II-III	CARD5/VOICE3	TREBLE II	A7&8/BLOCK&WHITE
CLARINET	8'	CARD5/VOICE1	TREBLE II	A7&8/BLACK&WHITE
GREAT		RACK 2		
BOURDON	16'	CARD3/VOICE4	BASS	B1&2/BROWN&BLUE
DIAPASON	8'	CARD3/VOICE3	BASS	B1&2/BROWN&BLUE
GAMBA	8'	CARD1/VOICE3	TREBLE I	B5&6/BROWN&GREY
RÖHRFLUTE	8'	CARD1/VOICE2	MIDDLE	B3&4/BROWN&VIOLET
OCTAVE	4'	CARD1/VOICE1	MIDDLE	B3&4/BROWN&VIOLET
OPEN FLUTE	. 4'	CARD3/VOICE2	TREBLE I	B5&6/BROWN&GREY
TWELFTH	2 2/3'	CARD2/VOICE4	BASS	B1&2/BROWN&BLUE
SUPEROCTAVE	2'	CARD4/VOICE4	TREBLE I	B5&6/BROWN&GREY
CONICAL FLUTE	2'	CARD2/VOICE3	TREBLE II	B7&8/BROWN&WHITE
CORNET	IV	CARD2/VOICE2	TREBLE II	B7&8/BROWN&WHITE
MIXTURE	V-VII	CARD4/VOICE2	TREBLE II	B7&8/BROWN&WHITE
SCHARF	III-V	CARD4/VOICE1	TREBLE I	B5&6/BROWN&GREY
CONTRA TRUMPET	16'	CARD4/VOICE3	MIDDLE	B3&4/BROWN&VIOLET
TRUMPET	8'	CARD2/VOICE1	TREBLE II	B7&8/BROWN&WHITE
SWELL		RACK 3		
QUINTATON	16'	CARD3/VOICE4	MIDDLE	C3&4/RED&VIOLET
OPEN DIAPASON	8'	CARD3/VOICE3	BASS	C1&2/RED&BLUE
VIOLA	8'	CARD1/VOICE4	TREBLE I	C5&6/RED&GREY
CELESTE	8'	CARD1/VOICE3	BASS	C1&2/RED&BLUE
STOPPED FLUTE	8'	CARD1/VOICE2	MIDDLE	C3&4/RED&VIOLET
OCTAVE	4'	CARD1/VOICE1	MIDDLE	C3&4/RED&VIOLET
RÖHRFLUTE	4'	CARD4/VOICE4	TREBLE I	C5&6/RED&GREY
FLUTE TWELFTH	2 2/3'	CARD2/VOICE4	BASS	C1&2/RED&BLUE
WALDFLUTE	2'	CARD2/VOICE3	TREBLE II	C7&8/RED&WHITE
NAZARD	1 1/3'	CARD4/VOICE2	TREBLE II	C7&8/RED&WHITE
OCTAVE	1'	CARD4/VOICE1	TREBLE I	C5&6/RED&GREY
SESQUIALTER	II	CARD3/VOICE2	TREBLE II	C7&8/RED&WHITE
RAUSCHPFEIFE	III-IV	CARD3/VOICE1	TREBLE II	C7&8/RED&WHITE
FAGOTTO	16'	CARD2/VOICE2	BASS	C1&2/RED&BLUE
CROMORNE	8'	CARD2/VOICE1	MIDDLE	C3&4/RED&VIOLET
VOX HUMANA	8'	CARD4/VOICE3	TREBLE I	C5&6/RED&GREY

VOICES OPUS 365D

VOICE NAME		VOICECARD/ VOICENUMBER	AMPLIFIER	OCTALSOCKET PINS/COLOURS
PEDAL		RACK 1		
SUBBASS	32'	CARD1/VOICE1	MIDDLE	A3&4/BLACK&VOILET
DOUBLE BASS	16'	CARD1/VOICE2	MIDDLE	A3&4/BLACK&VIOLET
SUBBASS	16'	CARD3/VOICE1	BASS	A1&2/BLACK&BLUE
ECHO BOURDON	16'	CARD1/VOICE3	MIDDLE	A3&4/BLACK&VIOLET
OCTAVE	8'	CARD3/VOICE2	BASS	A1&2/BLACK&BLUE
VIOLON	8'	CARD3/VOICE3	TREBLE I	A5&6/BLACK&GREY
GEDACKT	8'	CARD1/VOICE4	TREBLE I	A5&6/BLACK&GREY
CHORALBASS	4'	CARD2/VOICE1	TREBLE I	A5&6/BLACK&GREY
BASSFLUTE	4'	CARD3/VOICE4	TREBLE II	A7&8/BLACK&WHITE
MIXTURE	III	CARD2/VOICE2	TREBLE II	A7&8/BLACK&WHITE
BOMBARDE	32'	CARD4/VOICE1	BASS	A1&2/BLACK&BLUE
CONTRA TRUMPET	16'	CARD2/VOICE3	MIDDLE	A1&2/BLACK&VIOLET
TRUMPET	8'	CARD2/VOICE4	TREBLE II	A7&8/BLACK&WHITE
CLARION	4'	CARD4/VOICE2	TREBLE I	A5&6/BLACK&GREY
CHOIR		RACK2		
LIEBLICH GEDECKT	16'	CARD3/VOICE3	MIDDLE	B3&4/RED&VIOLET
BOURDON	8'	CARD3/VOICE4	BASS	B1&2/RED&BLUE
OCTAVE	4'	CARD4/VOICE1	MIDDLE	B3&4/RED&VIOLET
NACHTHORN	4'	CARD4/VOICE2	TREBLE I	B5&6/RED&GREY
NAZARD	2 2/3'	CARD4/VOICE3	MIDDLE	B3&4/RED&VIOLET
OCTAVE	2'	CARD3/VOICE1	TREBLE I	B5&6/RED&GREY
FLUTE	2'	CARD4/VOICE4	TREBLE II	B7&8/RED&WHITE
TIERCE	1 3/5'	CARD5/VOICE2	TREBLE I	B5&6/RED&GREY
SUPERQUINT	1 1/3'	CARD3/VOICE2	TREBLE I	B5&6/RED&GREY
SIFFLUTE	1'	CARD2/VOICE3	TREBLE II	B7&8/RED&WHITE
CYMBAL	II-III	CARD5/VOICE3	TREBLE II	B7&8/RED&WHITE
CROMORNE	16'	CARD2/VOICE4	BASS	B1&2/RED&BLUE
CLARINET	8'	CARD5/VOICE1	TREBLE II	B7&8/RED&WHITE
GREAT		RACK 3		
BOURDON	16'	CARD3/VOICE4	BASS	C1&2/BROWN&BLUE
OPEN DIAPASON	8'	CARD3/VOICE2	BASS	C1&2/BROWN&BLUE
DIAPASON	8'	CARD5/VOICE1	MIDDLE	C3&4/BROWN&VIOLET
GAMBA	8'	CARD1/VOICE3	TREBLE I	C5&6/BROWN&GREY
RÖHRFLUTE	8'	CARD1/VOICE2	MIDDLE	C3&4/BROWN&VIOLET
OCTAVE	4'	CARD1/VOICE1	MIDDLE	C3&4/BROWN&VIOLET
SALICIONAL	4'	CARD5/VOICE3	BASS	C1&2/BROWN&BLUE
OPEN FLUTE	4'	CARD3/VOICE2	TREBLE I	C5&6/BROWN&GREY
TWELFTH	2 2/3'	CARD2/VOICE4	BASS	C1&2/BROWN&BLUE
SUPEROCTAVE	2'	CARD4/VOICE4	TREBLE I	C5&6/BROWN&GREY
CONICAL FLUTE	2'	CARD2/VOICE3	TREBLE II	C7&8/BROWN&WHITE
LARIGOT	1 1/3'	CARD5/VOICE2	TREBLE II	C7&8/BROWN&WHITE
CORNET	IV	CARD2/VOICE2	TREBLE II	C7&8/BROWN&WHITE
MIXTURE	V-VII	CARD4/VOICE2	TREBLE II	C7&8/BROWN&WHITE
SCHARF	III-V	CARD4/VOICE1	TREBLE I	C5&6/BROWN&GREY
CONTRA TRUMPET	16'	CARD4/VOICE3	MIDDLE	C3&4/BROWN&VIOLET
TRUMPET	8'	CARD2/VOICE1	TREBLE II	C7&8/BROWN&WHITE
CLARION	4'	CARD5/VOICE4	TREBLE I	C7&8/BROWN&GREY
SWELL		RACK 4		
QUINTATON	16'	CARD3/VOICE4	MIDDLE	D3&4/ORANGE&VIOLET
OPEN DIAPASON	8'	CARD3/VOICE3	BASS	D1&2/ORANGE&BLUE
VIOLA	8'	CARD1/VOICE4	TREBLE I	D5&6/ORANGE&GREY
CELESTE	8'	CARD1/VOICE3	BASS	D1&2/ORANGE&BLUE
FLUTE HARMONIQUE	8'	CARD5/VOICE2	BASS	D1&2/ORANGE&BLUE
STOPPED FLUTE	8'	CARD1/VOICE2	MIDDLE	D3&4/ORANGE&VIOLET
OCTAVE	4'	CARD1/VOICE1	MIDDLE	D3&4/ORANGE&VIOLET
GEMSHORN	4'	CARD5/VOICE1	TREBLE II	D7&8/ORANGE&WHITE
RÖHRFLUTE	4'	CARD4/VOICE4	TREBLE I	D5&6ORANGE/&GREY
FLUTE TWELFTH	2 2/3'	CARD2/VOICE4	BASS	D1&2/ORANGE&BLUE
OCTAVE	2'	CARD5/VOICE3	TREBLE I	D5&6/ORANGE&GREY
WALDFLUTE	2'	CARD2/VOICE3	TREBLE II	D7&8/ORANGE&WHITE
NAZARD	1 1/3'	CARD4/VOICE2	TREBLE II	D7&8/ORANGE&WHITE
OCTAVE	1'	CARD4/VOICE1	TREBLE I	D5&6/ORANGE&GREY
SESQUIALTER	II	CARD3/VOICE2	TREBLE II	D7&8/ORANGE&WHITE
RAUSCHPFEIFE	III-IV	CARD3/VOICE1	TREBLE II	D7&8/ORANGE&WHITE
FAGOTTO	16'	CARD2/VOICE2	BASS	D1&2/ORANGE&BLUE
CROMORNE	8'	CARD2/VOICE1	MIDDLE	D3&4/ORANGE&VIOLET

VOICES OPUS 385D (pedal/choir/great)

VOICE NAME		VOICECARD/ VOICENUMBER	AMPLIFIER	OCTALSOCKET PINS/COLOURS
PEDAL		RACK 1		
SUBBASS	32'	CARD1/VOICE1	MIDDLE	A3&4/BLACK&VOILET
DOUBLE BASS	16'	CARD1/VOICE2	MIDDLE	A3&4/BLACK&VIOLET
SUBBASS	16'	CARD3/VOICE1	BASS	A1&2/BLACK&BLUE
ECHO BOURDON	16'	CARD1/VOICE3	MIDDLE	A3&4/BLACK&VIOLET
OCTAVE	8'	CARD3/VOICE2	BASS	A1&2/BLACK&BLUE
VIOLON	8'	CARD3/VOICE3	TREBLE I	A5&6/BLACK&GREY
GEDACKT	8'	CARD1/VOICE4	TREBLE I	A5&6/BLACK&GREY
CHORALBASS	4'	CARD2/VOICE1	TREBLE I	A5&6/BLACK&GREY
BASSFLUTE	4'	CARD3/VOICE4	TREBLE II	A7&8/BLACK&WHITE
MIXTURE	III	CARD2/VOICE2	TREBLE II	A7&8/BLACK&WHITE
BOMBARDE	32'	CARD4/VOICE1	BASS	A1&2/BLACK&BLUE
CONTRA TRUMPET	16'	CARD2/VOICE3	MIDDLE	A1&2/BLACK&VIOLET
TRUMPET	8'	CARD2/VOICE4	TREBLE II	A7&8/BLACK&WHITE
CLARION	4'	CARD4/VOICE2	TREBLE I	A5&6/BLACK&GREY
CHOIR		RACK2		
LIEBLICH GEDECKT	16'	CARD3/VOICE3	MIDDLE	B3&4/RED&VIOLET
BOURDON	8'	CARD3/VOICE4	BASS	B1&2/RED&BLUE
OCTAVE	4'	CARD4/VOICE1	MIDDLE	B3&4/RED&VIOLET
NACHTHORN	4'	CARD4/VOICE2	TREBLE I	B5&6/RED&GREY
NAZARD	2 2/3'	CARD4/VOICE3	MIDDLE	B3&4/RED&VIOLET
OCTAVE	2'	CARD3/VOICE1	TREBLE I	B5&6/RED&GREY
FLUTE	2'	CARD4/VOICE4	TREBLE II	B7&8/RED&WHITE
TIERCE	1 3/5'	CARD5/VOICE2	TREBLE I	B5&6/RED&GREY
SUPERQUINT	1 1/3'	CARD3/VOICE2	TREBLE I	B5&6/RED&GREY
SIFFLUTE	1'	CARD2/VOICE3	TREBLE II	B7&8/RED&WHITE
CYMBAL	II-III	CARD5/VOICE3	TREBLE II	B7&8/RED&WHITE
CROMORNE	16'	CARD2/VOICE4	BASS	B1&2/RED&BLUE
CLARINET	8'	CARD5/VOICE1	TREBLE II	B7&8/RED&WHITE
GREAT		RACK 3		
BOURDON	16'	CARD3/VOICE4	BASS	C1&2/BROWN&BLUE
OPEN DIAPASON	8'	CARD3/VOICE2	BASS	C1&2/BROWN&BLUE
DIAPASON	8'	CARD5/VOICE1	MIDDLE	C3&4/BROWN&VIOLET
GAMBA	8'	CARD1/VOICE3	TREBLE I	C5&6/BROWN&GREY
RÖHRFLUTE	8'	CARD1/VOICE2	MIDDLE	C3&4/BROWN&VIOLET
OCTAVE	4'	CARD1/VOICE1	MIDDLE	C3&4/BROWN&VIOLET
SALICIONAL	4'	CARD5/VOICE3	BASS	C1&2/BROWN&BLUE
OPEN FLUTE	4'	CARD3/VOICE2	TREBLE I	C5&6/BROWN&GREY
TWELFTH	2 2/3'	CARD2/VOICE4	BASS	C1&2/BROWN&BLUE
SUPEROCTAVE	2'	CARD4/VOICE4	TREBLE I	C5&6/BROWN&GREY
CONICAL FLUTE	2'	CARD2/VOICE3	TREBLE II	C7&8/BROWN&WHITE
LARIGOT	1 1/3'	CARD5/VOICE2	TREBLE II	C7&8/BROWN&WHITE
CORNET	IV	CARD2/VOICE2	TREBLE II	C7&8/BROWN&WHITE
MIXTURE	V-VII	CARD4/VOICE2	TREBLE II	C7&8/BROWN&WHITE
SCHARF	III-V	CARD4/VOICE1	TREBLE I	C5&6/BROWN&GREY
CONTRA TRUMPET	16'	CARD4/VOICE3	MIDDLE	C3&4/BROWN&VIOLET
TRUMPET	8'	CARD2/VOICE1	TREBLE II	C7&8/BROWN&WHITE
CLARION	4'	CARD5/VOICE4	TREBLE I	C7&8/BROWN&GREY

VOICES OPUS 385D (swell/solo)

VOICE NAME		VOICECARD/ VOICENUMBER	AMPLIFIER	OCTALSOCKET PINS/COLOURS
SWELL		RACK 4		
QUINTATON	16'	CARD3/VOICE4	MIDDLE	D3&4/ORANGE&VIOLET
OPEN DIAPASON	8'	CARD3/VOICE3	BASS	D1&2/ORANGE&BLUE
VIOLA	8'	CARD1/VOICE4	TREBLE I	D5&6/ORANGE&GREY
CELESTE	8'	CARD1/VOICE3	BASS	D1&2/ORANGE&BLUE
FLUTE HARMONIQUE	8'	CARD5/VOICE2	BASS	D1&2/ORANGE&BLUE
STOPPED FLUTE	8'	CARD1/VOICE2	MIDDLE	D3&4/ORANGE&VIOLET
OCTAVE	4'	CARD1/VOICE1	MIDDLE	D3&4/ORANGE&VIOLET
GEMSHORN	4'	CARD5/VOICE1	TREBLE II	D7&8/ORANGE&WHITE
RÖHRFLUTE	4'	CARD4/VOICE4	TREBLE I	D5&6ORANGE/&GREY
FLUTE TWELFTH	2 2/3'	CARD2/VOICE4	BASS	D1&2/ORANGE&BLUE
OCTAVE	2'	CARD5/VOICE3	TREBLE I	D5&6/ORANGE&GREY
WALDFLUTE	2'	CARD2/VOICE3	TREBLE II	D7&8/ORANGE&WHITE
NAZARD	1 1/3'	CARD4/VOICE2	TREBLE II	D7&8/ORANGE&WHITE
OCTAVE	1'	CARD4/VOICE1	TREBLE I	D5&6/ORANGE&GREY
SESQUIALTER	II	CARD3/VOICE2	TREBLE II	D7&8/ORANGE&WHITE
RAUSCHPFEIFE	III-IV	CARD3/VOICE1	TREBLE II	D7&8/ORANGE&WHITE
FAGOTTO	16'	CARD2/VOICE2	BASS	D1&2/ORANGE&BLUE
CROMORNE	8'	CARD2/VOICE1	MIDDLE	D3&4/ORANGE&VIOLET
VOX HUMANA	8'	CARD4/VOICE3	TREBLE I	D5&6/ORANGE&GREY
SCHALMEY	4'	CARD5/VOICE4	TREBLE II	D7&8/ORANGE&WHITE
SOLO		RACK5		
CONICAL FLUTE	16'	CARD1/VOICE4	BASS	E1&2/YELLOW&BLUE
OPEN DIAPASON	8'	CARD3/VOICE3	BASS	E1&2/YELLOW&BLUE
PRINCIPAL	8'	CARD1/VOICE3	TREBLE II	E7&8/YELLOW&WHITE
UNDA MARIS	8'	CARD1/VOICE2	BASS	E1&2/YELLOW&BLUE
ORCESTRAL FLUTE	8'	CARD1/VOICE1	MIDDLE	E3&4/YELLOW&VIOLET
OCTAVE	4'	CARD3/VOICE2	MIDDLE	E3&4/YELLOW&VIOLET
CONCERT FLUTE	4'	CARD2/VOICE4	TREBLE I	E5&6/YELLOW&GREY
NAZARD	2 2/3'	CARD3/VOICE1	BASS	E1&2/YELLOW&BLUE
OCTAVE	2'	CARD2/VOICE3	TREBLE I	E5&6/YELLOW&GREY
FLUTE	2'	CARD5/VOICE4	TREBLE II	E7&8/YELLOW&WHITE
LARIGOT	1 1/3'	CARD5/VOICE3	TREBLE II	E7&8/YELLOW&WHITE
SIFFLET	1'	CARD5/VOICE2	TREBLE I	E5&6/YELLOW&GREY
MIXTURE	V-IX	CARD4/VOICE4	TREBLE II	E7&8/YELLOW&WHITE
CYMBAL	III	CARD5/VOICE1	TREBLE I	E5&6/YELLOW&GREY
BOMBARDE HARMONIQUE	16'	CARD3/VOICE4	MIDDLE	E3&4/YELLOW&VIOLET
TRUMPET HARMONIQUE	8'	CARD2/VOICE2	REED2	F3&4/GREEN&VIOLET
			REED1	F1&2/GREEN&BLUE
CLARION HARMONIQUE	4'	CARD4/VOICE2	REED1	F1&2/GREEN&BLUE
			REED2	F3&4/GREEN&VIOLET
ORCESTRAL OBOE	8'	CARD4/VOICE1	REED1	F1&2/GREEN&BLUE
ORCESTRAL CLARINET	8'	CARD2/VOICE1	REED2	F3&4/GREEN&VIOLET
TUBA	8'	CARD4/VOICE3	REED1	F1&2/GREEN&BLUE
			REED2	F3&4/GREEN&VIOLET